APRIL 20, 2005 (P= -25.65, Bo = -5.19, Lo = 17.51)

KITT PEAK MAGNETOGRAM--SOLIS

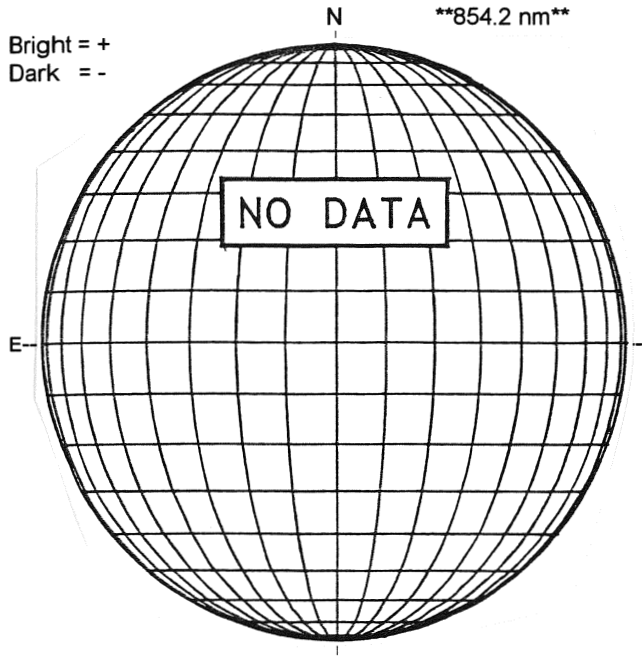

STANFORD MAGNETOGRAM

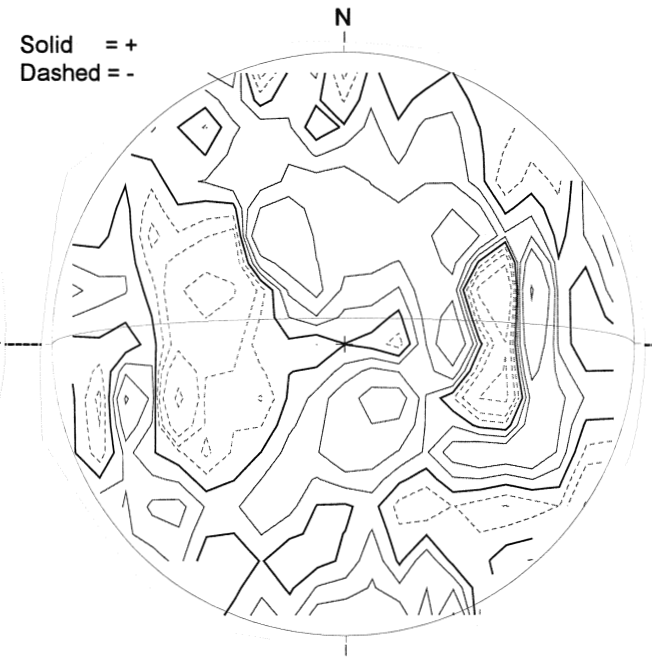

MT. WILSON MAGNETOGRAM

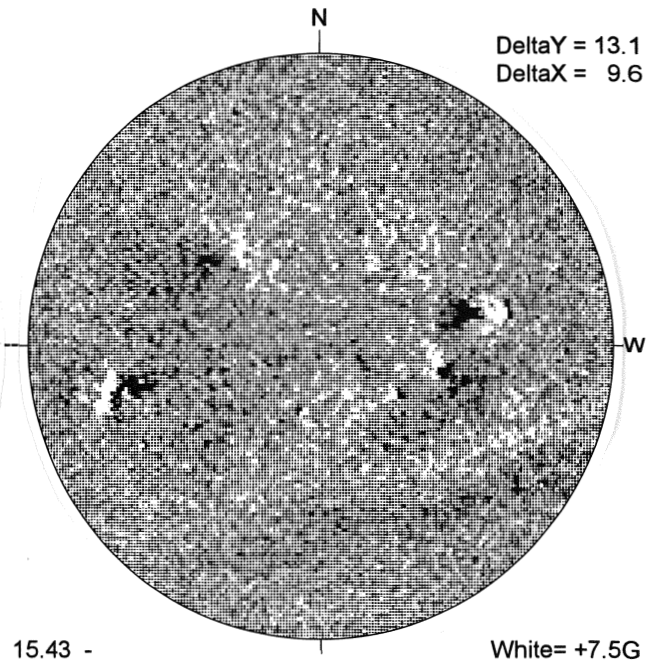

BIG BEAR H-ALPHA

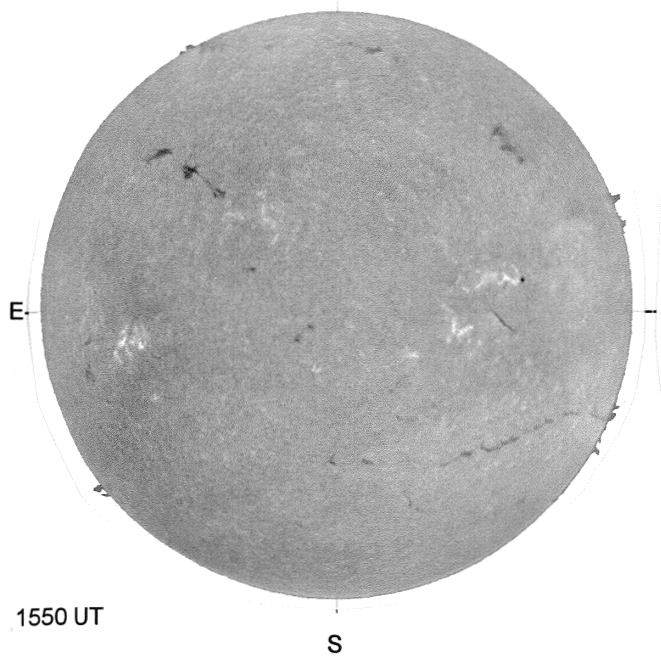

HOLLOMAN SUNSPOTS

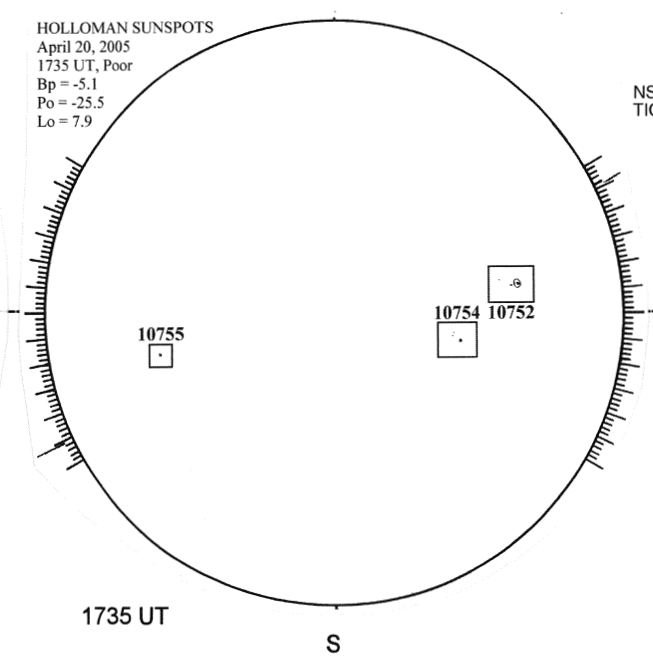
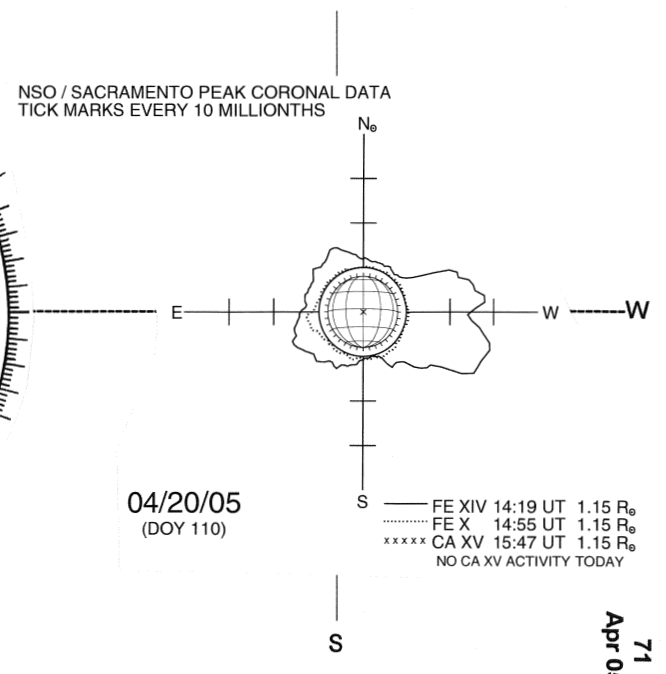
SACRAMENTO PEAK CORONA (1.15 Radii)----