APRIL 19, 2005 (P= -25.74, Bo = -5.28, Lo = 30.71)

KITT PEAK MAGNETOGRAM--SOLIS

854.2 nm

Bright = +
Dark = -

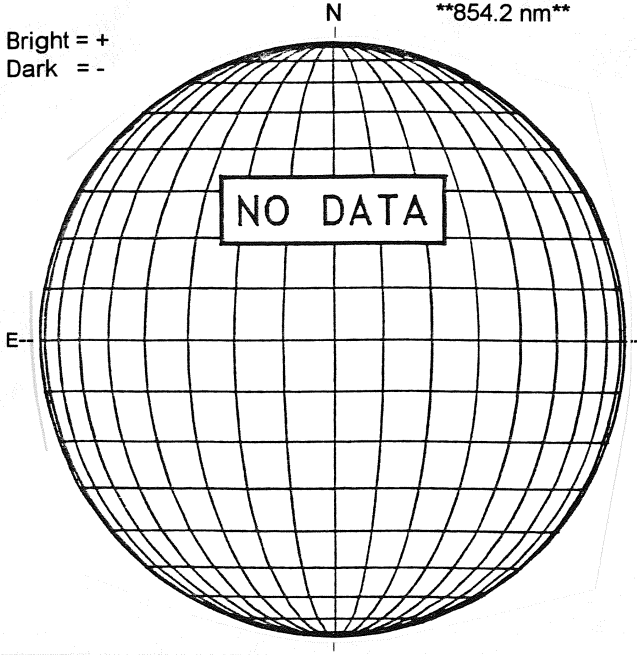

STANFORD MAGNETOGRAM

Solid = +
Dashed = -

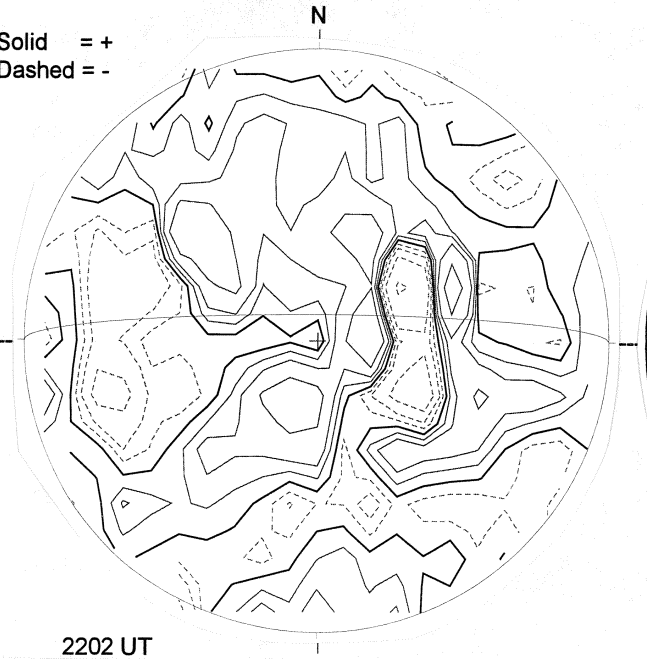

2202 UT

MT. WILSON MAGNETOGRAM

DeltaY =
DeltaX =

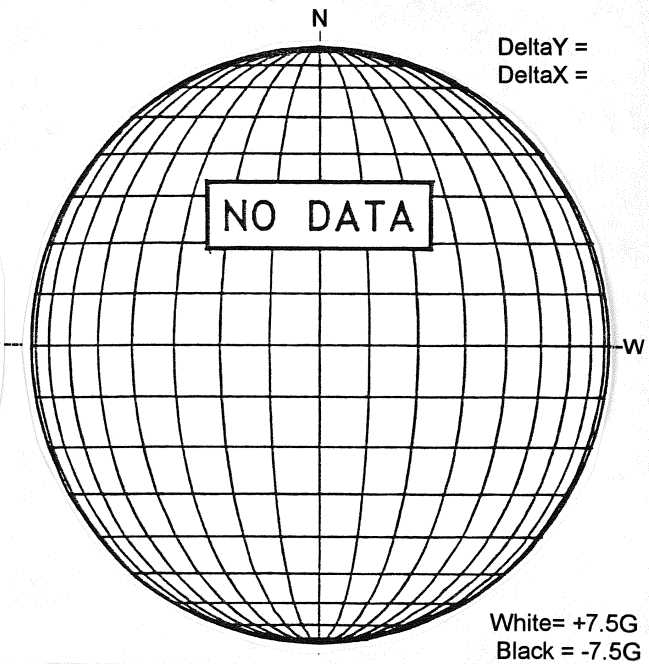

White= +7.5G
Black = -7.5G

BIG BEAR H-ALPHA

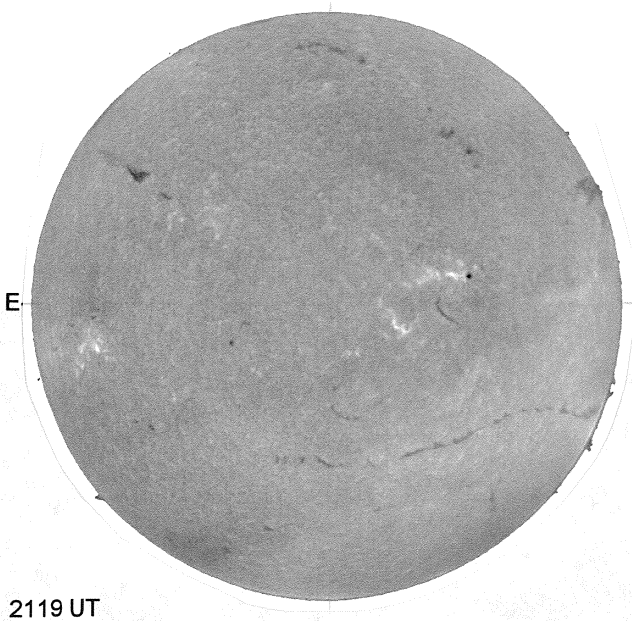

2119 UT

S

HOLLOMAN SUNSPOTS

HOLLOMAN SUNSPOTS
April 19, 2005
1405 UT, Fair
Bp = -5.2
Po = -25.6
Lo = 23.5

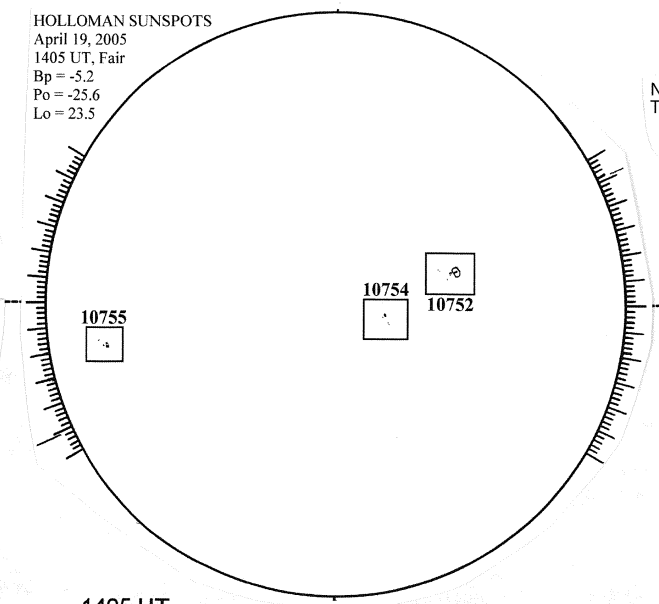

1405 UT

S

SACRAMENTO PEAK CORONA (1.15 Radii)

NSO / SACRAMENTO PEAK CORONAL DATA
TICK MARKS EVERY 10 MILLIONTHS

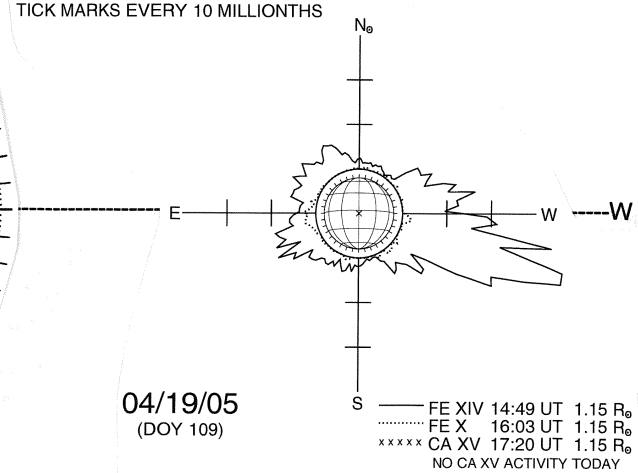

04/19/05
(DOY 109)

S