APRIL 18, 2005 (P= -25.83, Bo = -5.36, Lo = 43.92)

KITT PEAK MAGNETOGRAM--SOLIS

854.2 nm

Bright = +
Dark = -

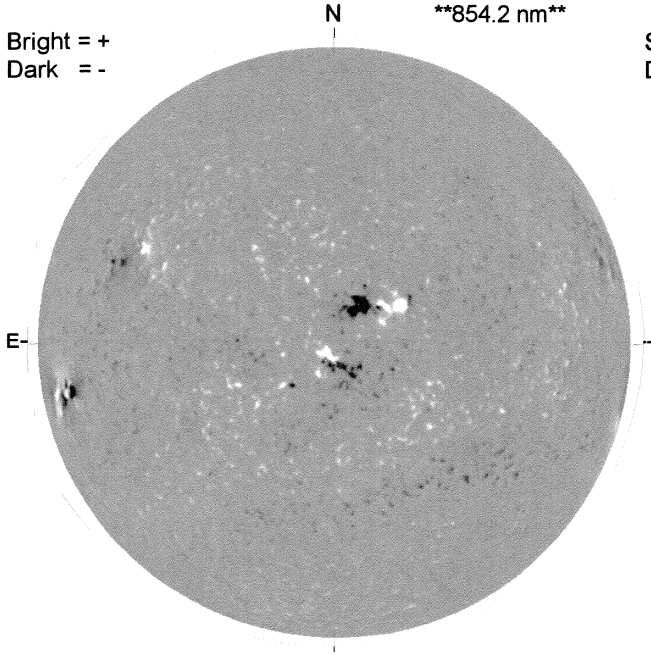

1643 UT

STANFORD MAGNETOGRAM

Solid = +
Dashed = -

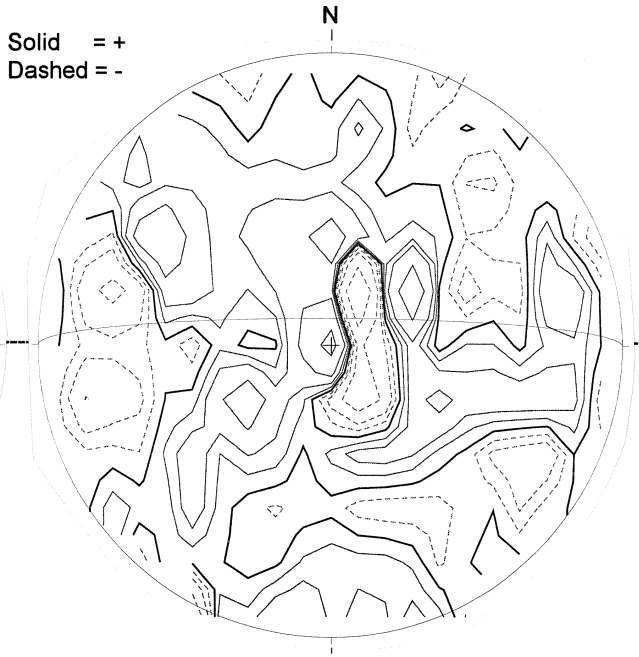

2224 UT

MT. WILSON MAGNETOGRAM

DeltaY = 13.1
DeltaX = 9.6

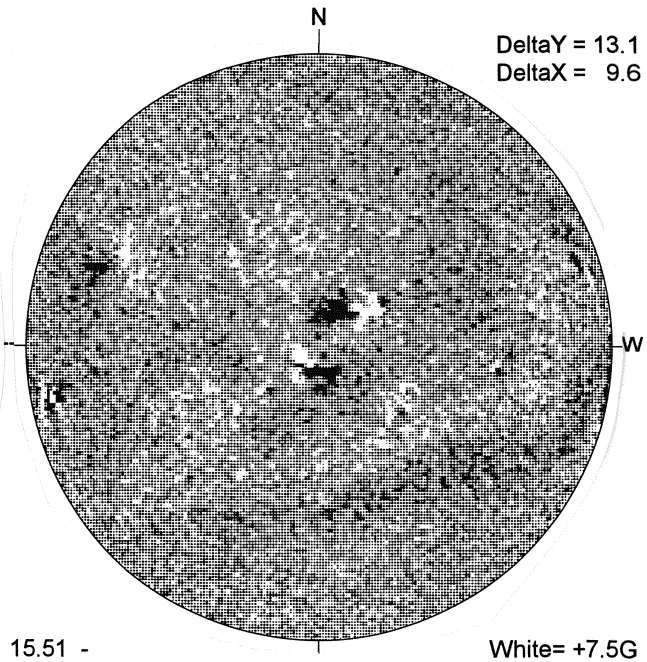

15.51 -
16.45 UT

White= +7.5G
Black = -7.5G

----- BIG BEAR H-ALPHA

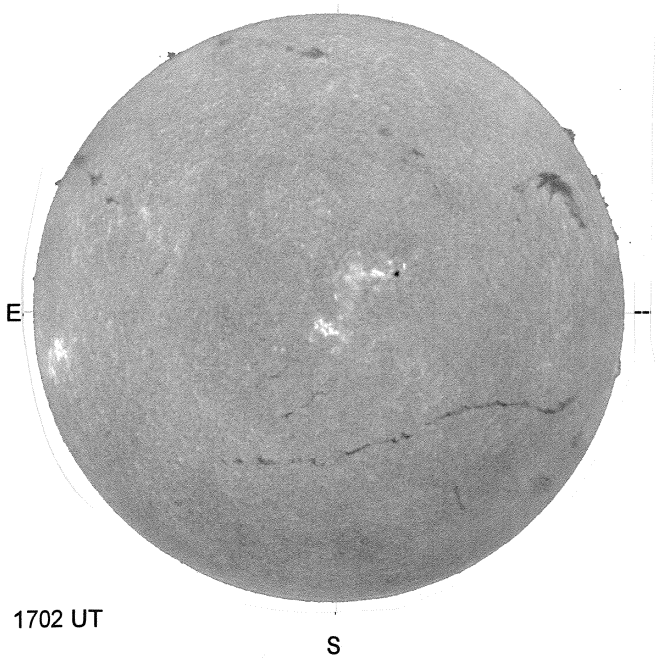

1702 UT

HOLLOMAN SUNSPOTS

HOLLOMAN SUNSPOTS
April 18, 2005
1516 UT, Good
Bp = -5.3
Po = -25.7
Lo = 36.7

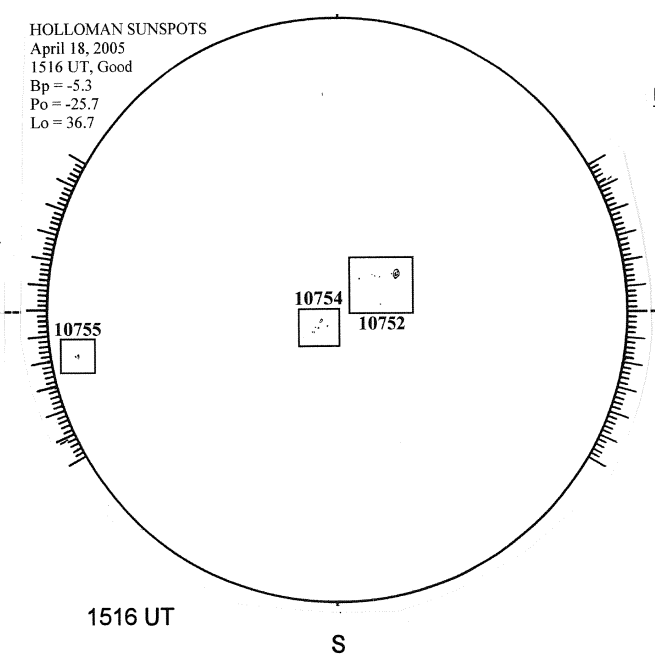

1516 UT

SACRAMENTO PEAK CORONA (1.15 Radii)----

NSO / SACRAMENTO PEAK CORONAL DATA
TICK MARKS EVERY 10 MILLIONTHS

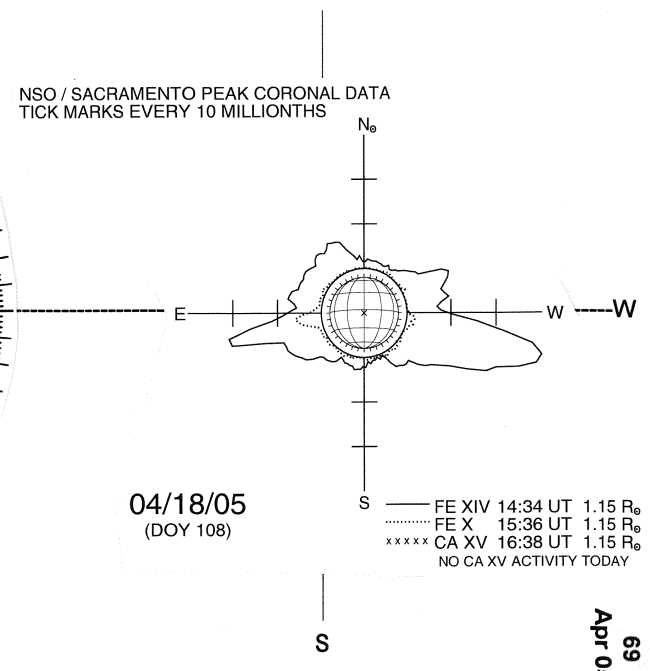

04/18/05
(DOY 108)

FE XIV 14:34 UT 1.15 R⊙
FE X 15:36 UT 1.15 R⊙
xxxxx CA XV 16:38 UT 1.15 R⊙
NO CA XV ACTIVITY TODAY