APRIL 13, 2005 (P= -26.15, Bo = -5.76, Lo = 109.94)

KITT PEAK MAGNETOGRAM--SOLIS

854.2 nm

Bright = +
Dark = -

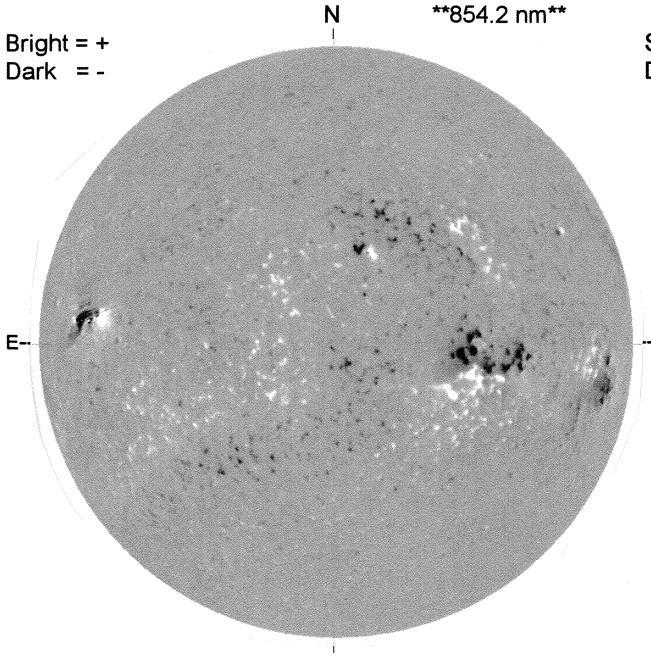

2153 UT

STANFORD MAGNETOGRAM

Solid = +
Dashed = -

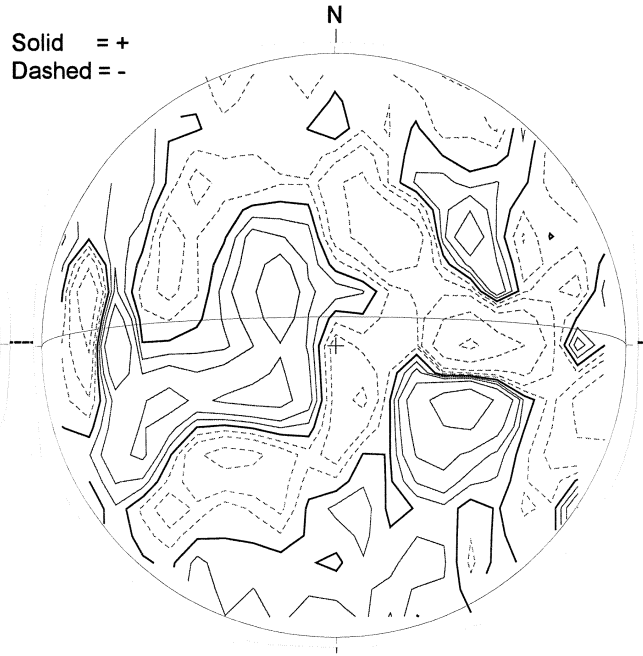

2220 UT

MT. WILSON MAGNETOGRAM

DeltaY = 13.1
DeltaX = 9.6

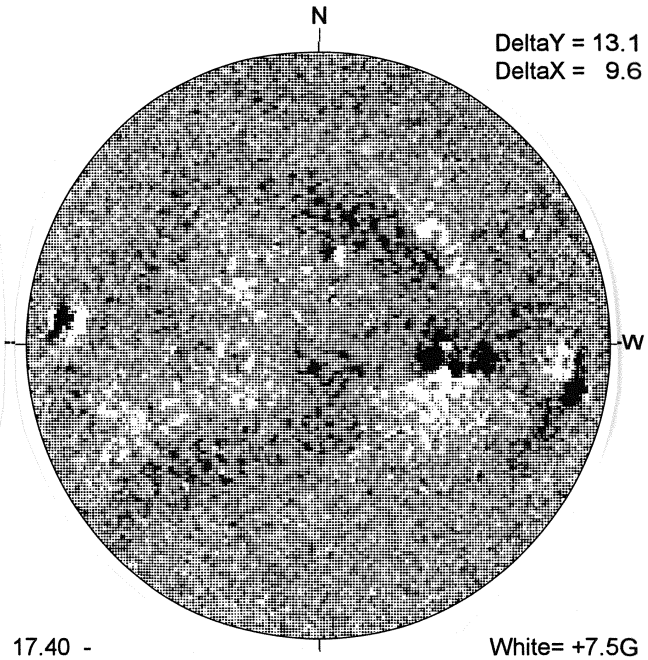

17.40 -
18.34 UT

White= +7.5G
Black = -7.5G

BIG BEAR H-ALPHA

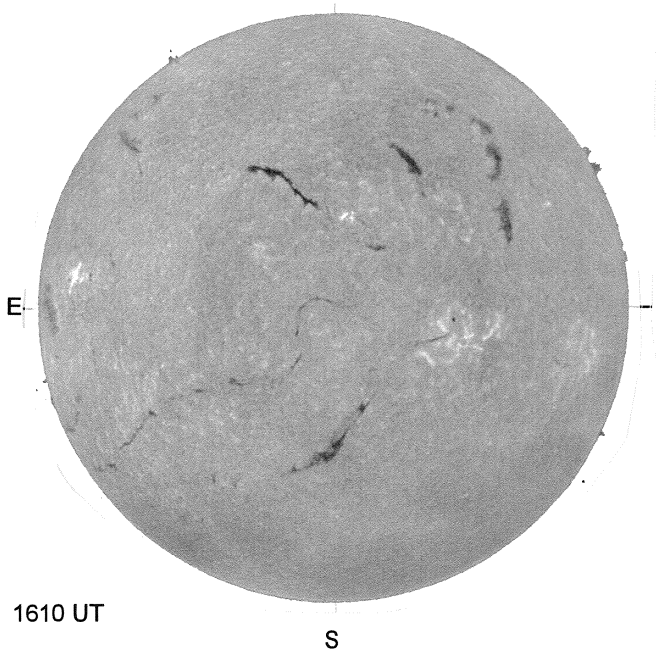

1610 UT

HOLLOMAN SUNSPOTS

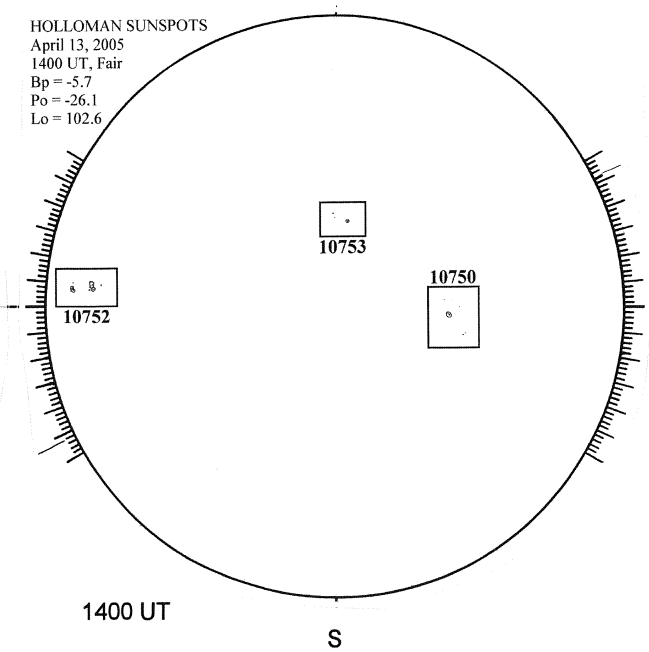

1400 UT
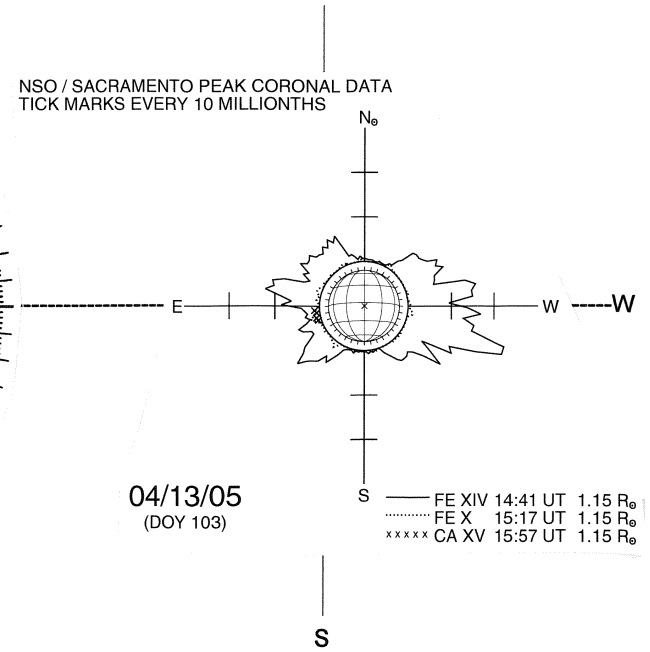
SACRAMENTO PEAK CORONA (1.15 Radii)