APRIL 12, 2005 (P= -26.19, Bo = -5.83, Lo = 123.14)

KITT PEAK MAGNETOGRAM--SOLIS

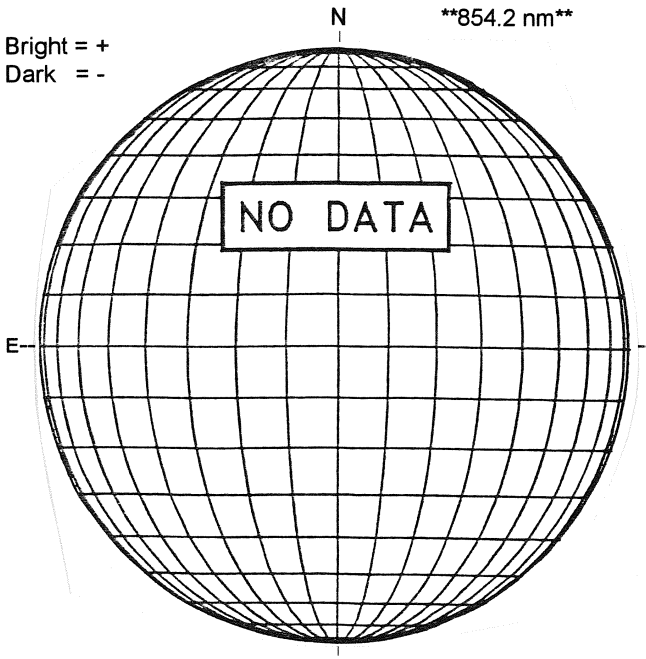

STANFORD MAGNETOGRAM

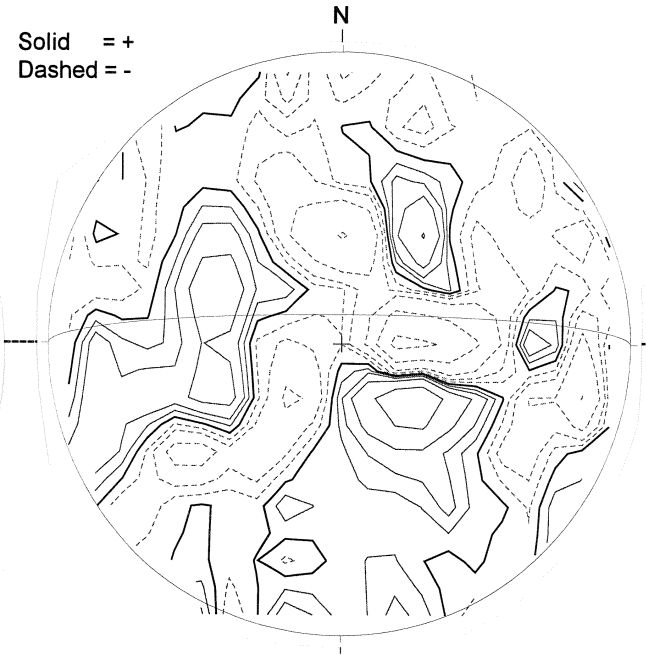

2115 UT

MT. WILSON MAGNETOGRAM

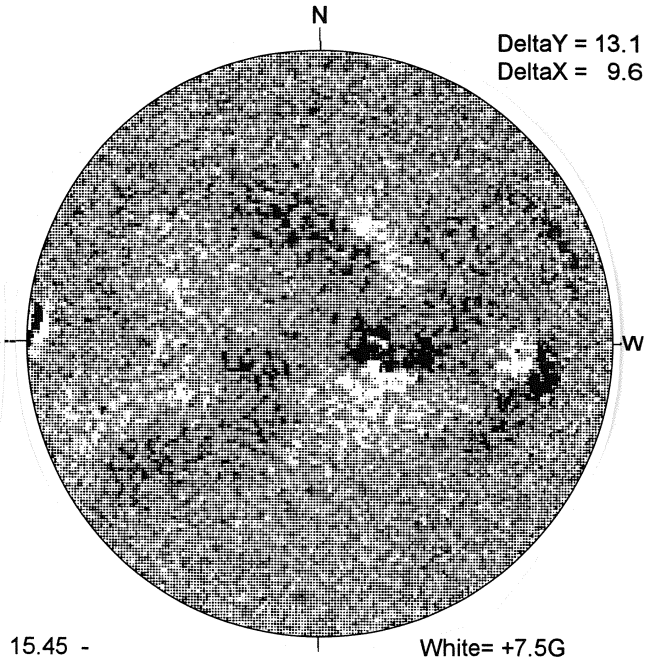

15.45 -
16.38 UT

White= +7.5G
Black = -7.5G

---- BIG BEAR H-ALPHA

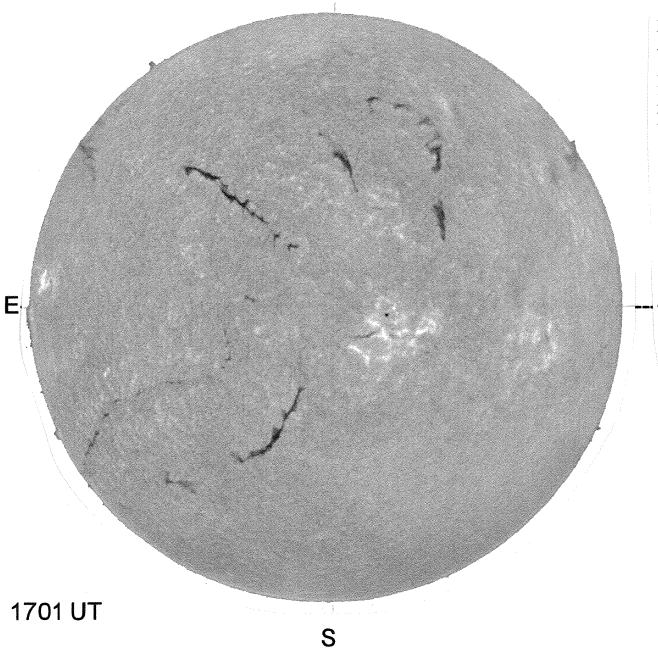

1701 UT

HOLLOMAN SUNSPOTS

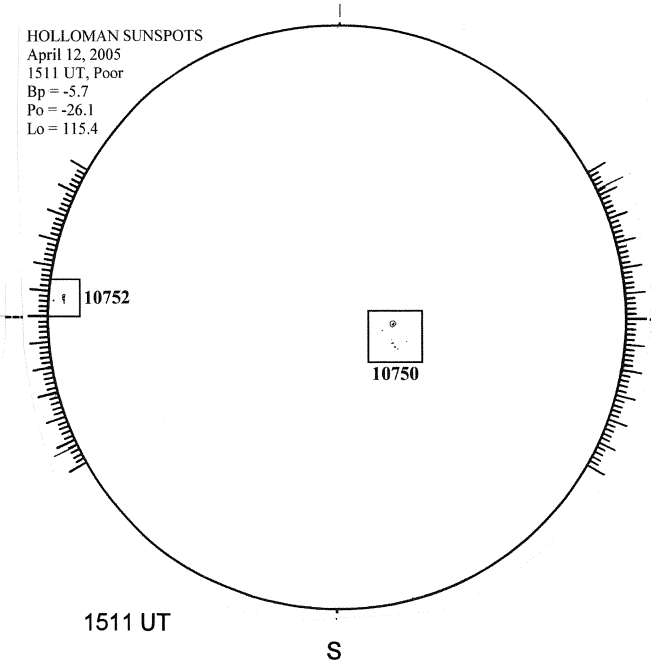

1511 UT

SACRAMENTO PEAK CORONA (1.15 Radii)----

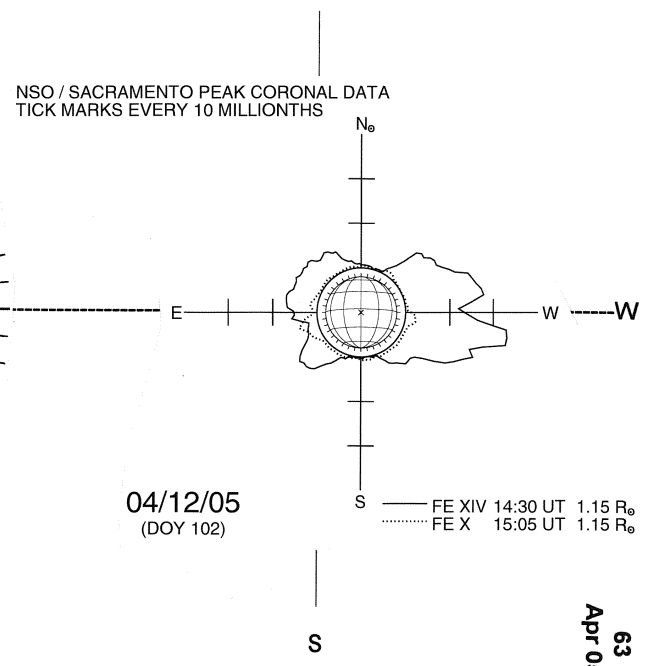

04/12/05
(DOY 102)