APRIL 1, 2005 (P= -26.17, Bo = -6.54, Lo = 268.31)

KITT PEAK MAGNETOGRAM--SOLIS

854.2 nm

Bright = +
Dark = -

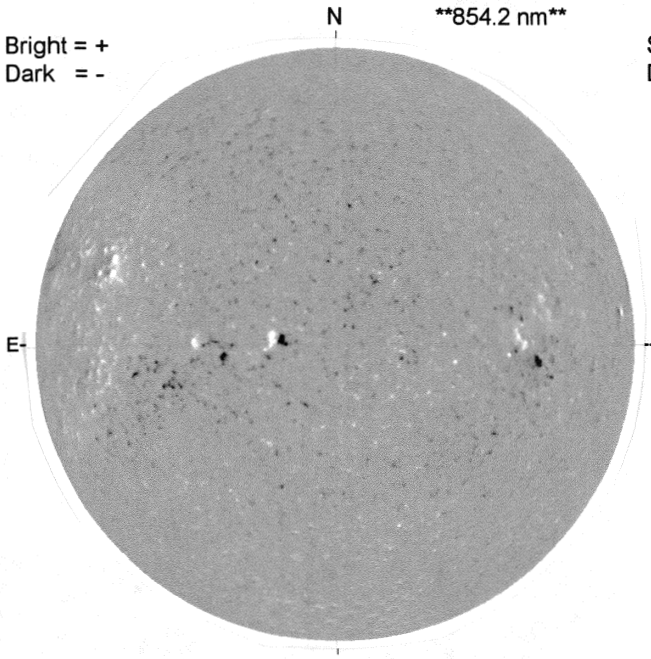

1739 UT

STANFORD MAGNETOGRAM

Solid = +
Dashed = -

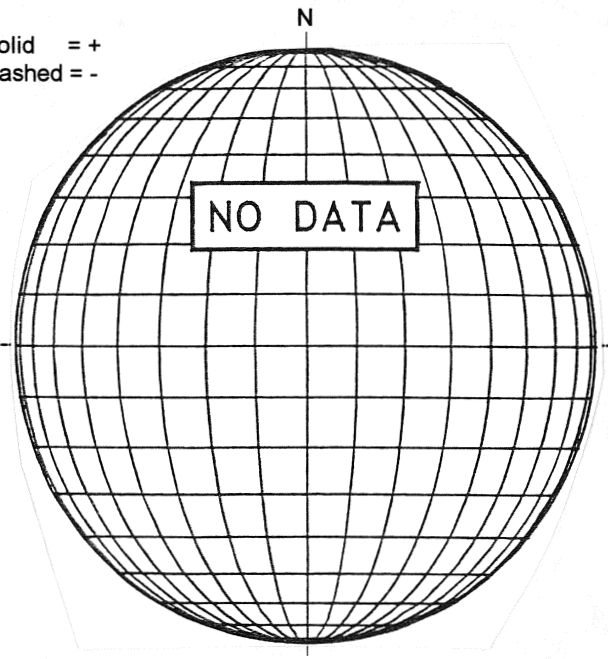

MT. WILSON MAGNETOGRAM

DeltaY = 13.1
DeltaX = 9.6

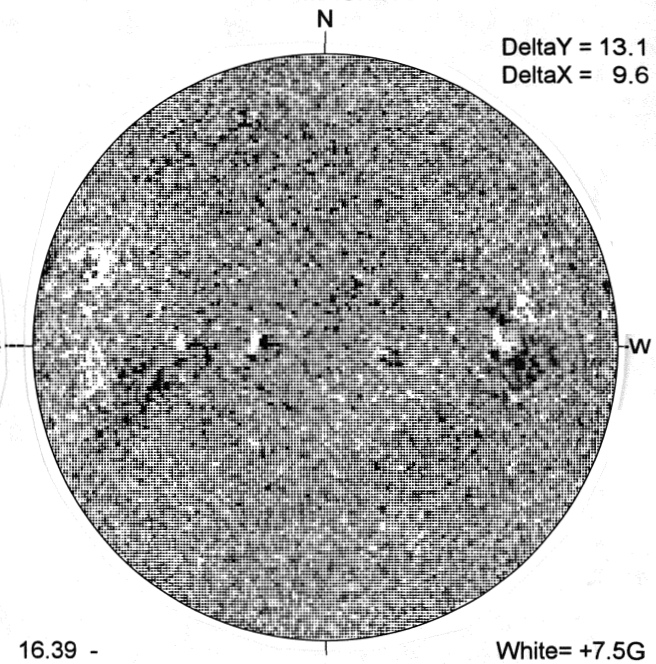

16.39 -
17.34 UT

White= +7.5G
Black = -7.5G

KANZELHOHE H-ALPHA

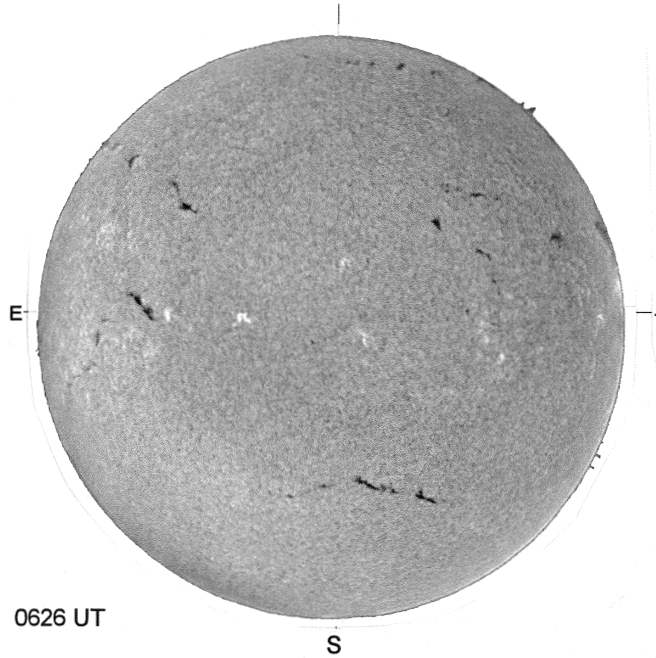

0626 UT

HOLLOMAN SUNSPOTS

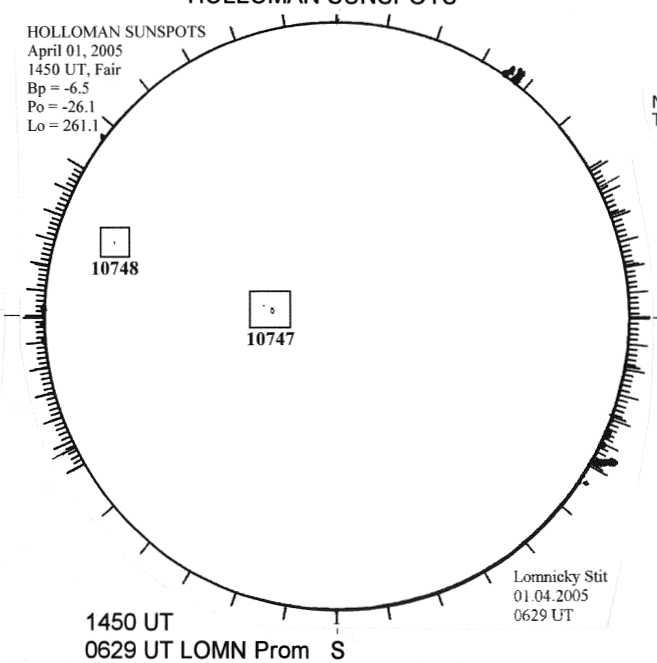

1450 UT
0629 UT LOMN Prom

SACRAMENTO PEAK CORONA (1.15 Radii)

NSO / SACRAMENTO PEAK CORONAL DATA
TICK MARKS EVERY 10 MILLIONTHS

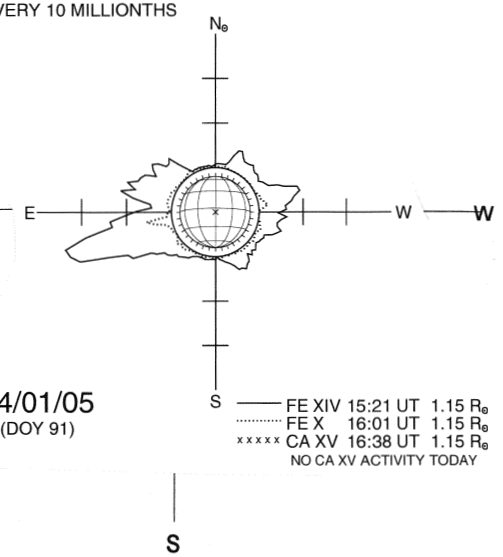

04/01/05
(DOY 91)

FE XIV 15:21 UT 1.15 $R_\odot$
FE X 16:01 UT 1.15 $R_\odot$
xxxxx CA XV 16:38 UT 1.15 $R_\odot$
NO CA XV ACTIVITY TODAY