MARCH 31, 2005 (P= -26.12, Bo = -6.59, Lo = 281.50)

KITT PEAK MAGNETOGRAM--SOLIS

854.2 nm

Bright = +
Dark = -

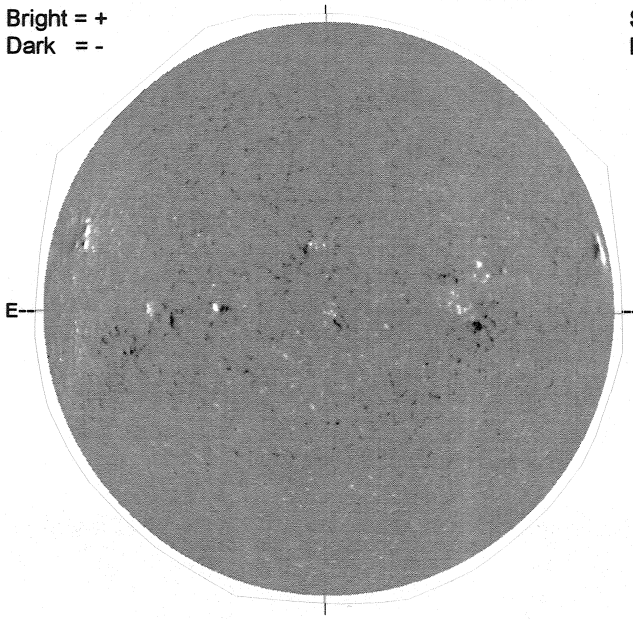

2109 UT

STANFORD MAGNETOGRAM

Solid = +
Dashed = -

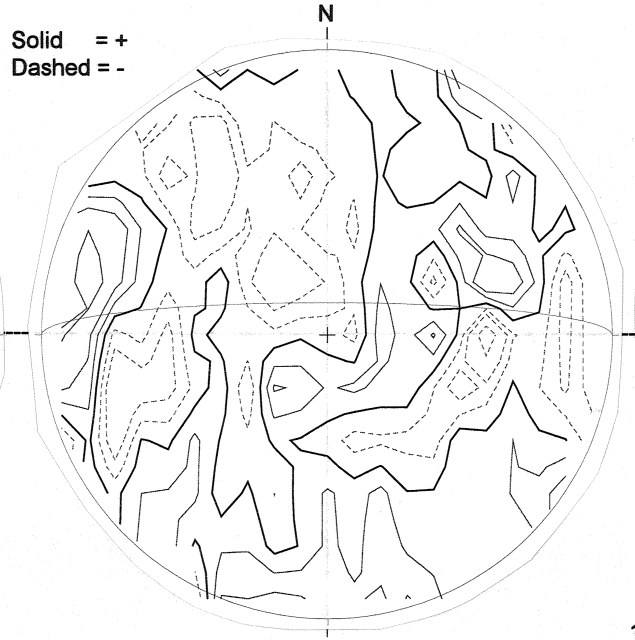

2134 UT

MT. WILSON MAGNETOGRAM

DeltaY = 13.1
DeltaX = 9.6

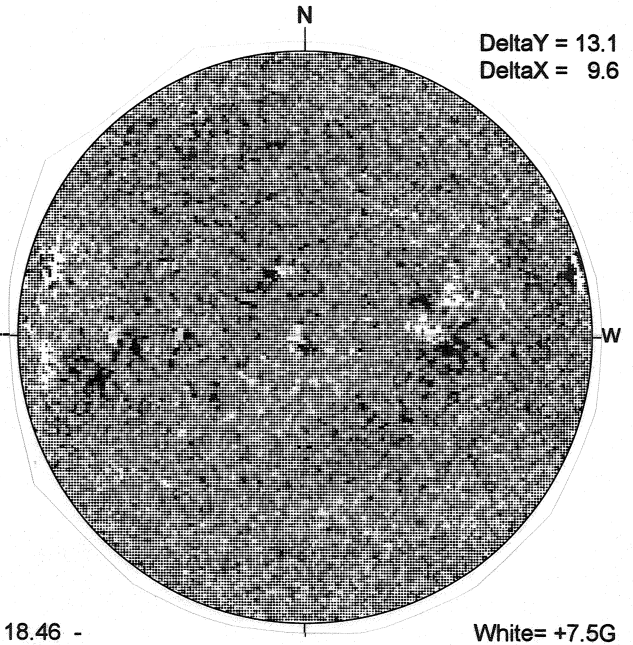

18.46 -
19.41 UT

White= +7.5G
Black = -7.5G

BIG BEAR H-ALPHA

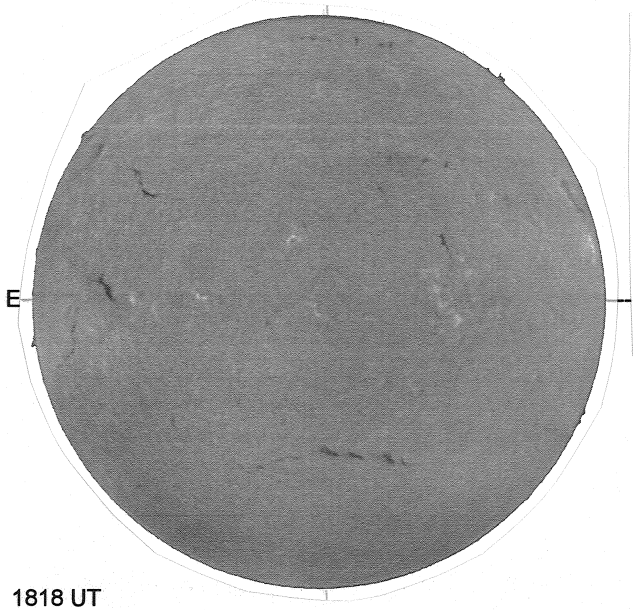

1818 UT

HOLLOMAN SUNSPOTS

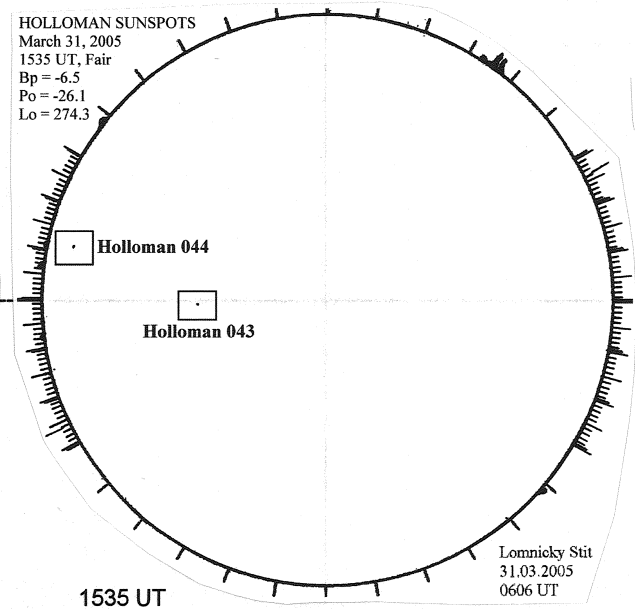

1535 UT
0606 UT LOMN Prom S

SACRAMENTO PEAK CORONA (1.15 Radii)

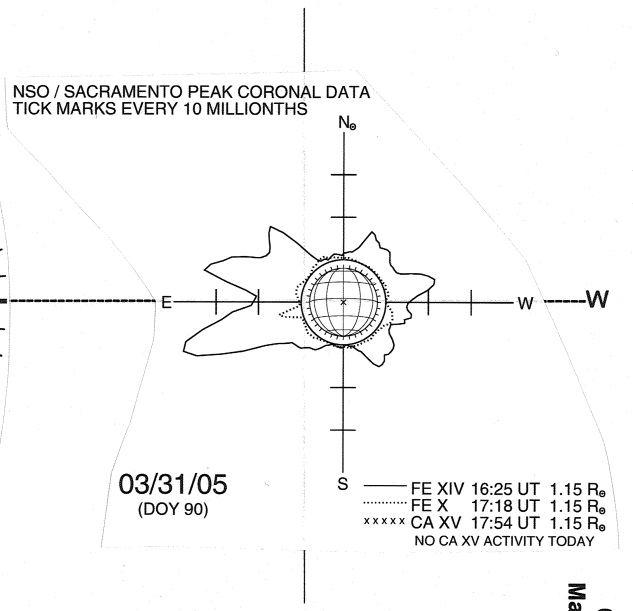

S