MARCH 22, 2005 (P= -25.40, Bo = -6.98, Lo = 40.20)

KITT PEAK MAGNETOGRAM--SOLIS

N **854.2 nm**

Bright = +
Dark = -

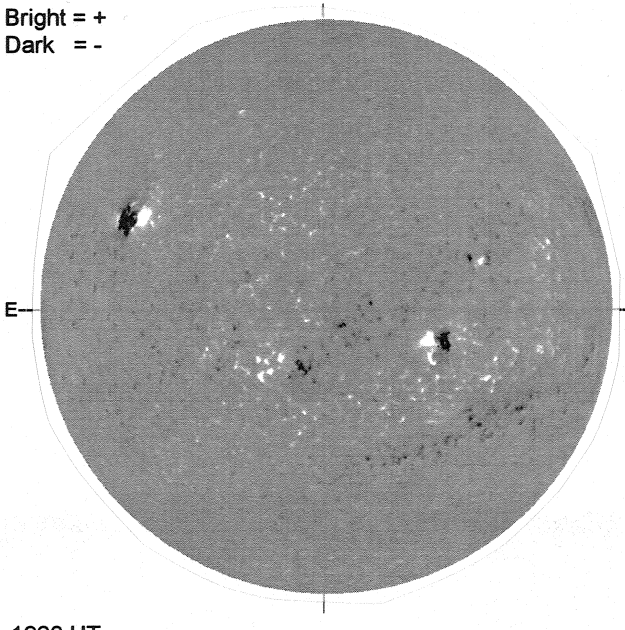

E

1920 UT

STANFORD MAGNETOGRAM

N

Solid = +
Dashed = -

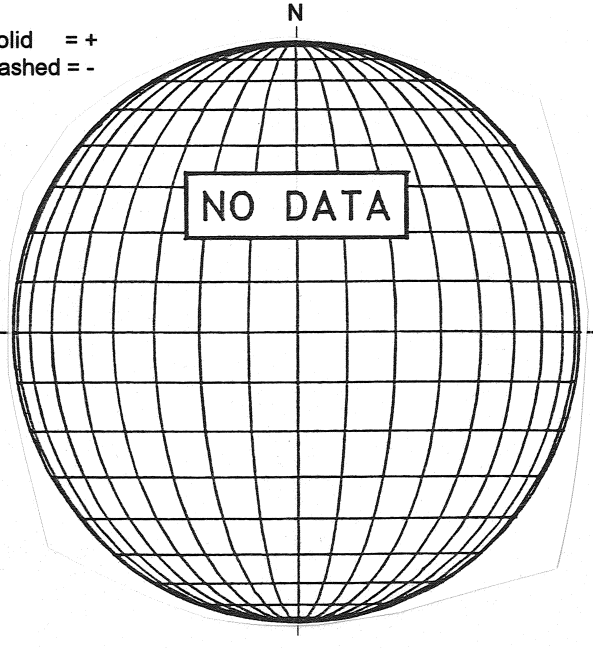

MT. WILSON MAGNETOGRAM

N

DeltaY =
DeltaX =

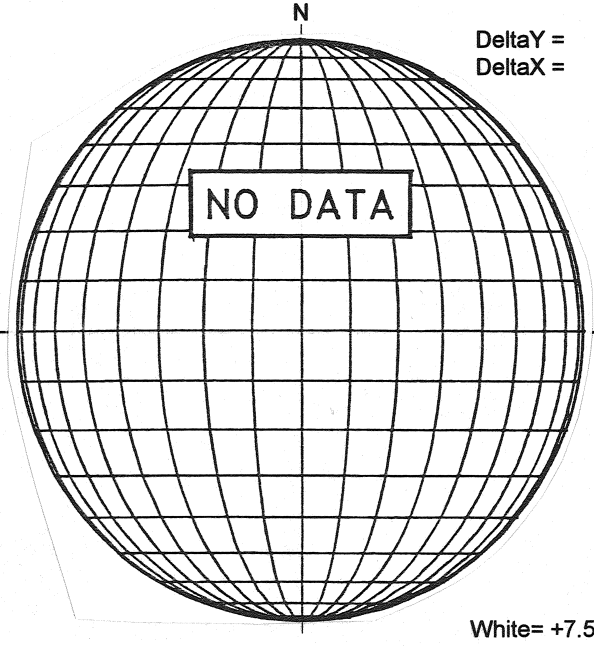

W

White= +7.5G
Black = -7.5G

BIG BEAR H-ALPHA

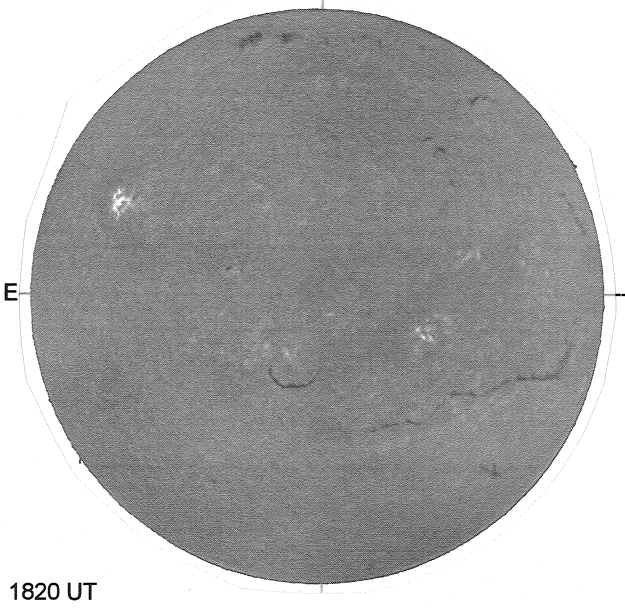

E

1820 UT

S

HOLLOMAN SUNSPOTS

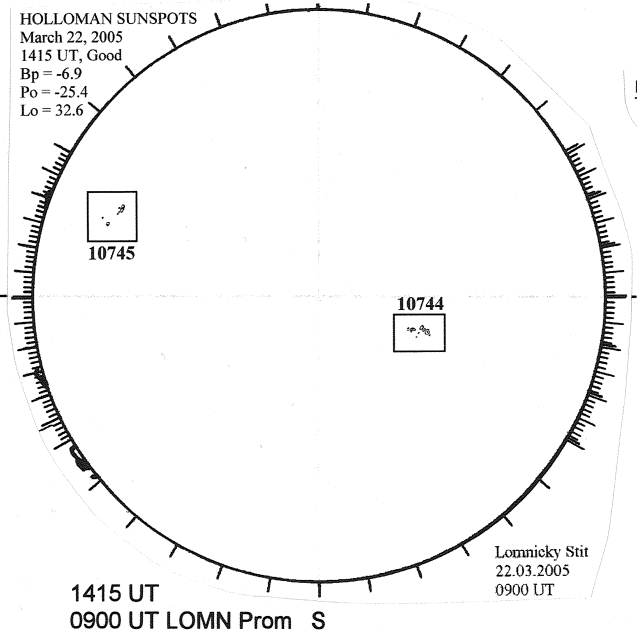

1415 UT
0900 UT LOMN Prom S

SACRAMENTO PEAK CORONA (1.15 Radii)

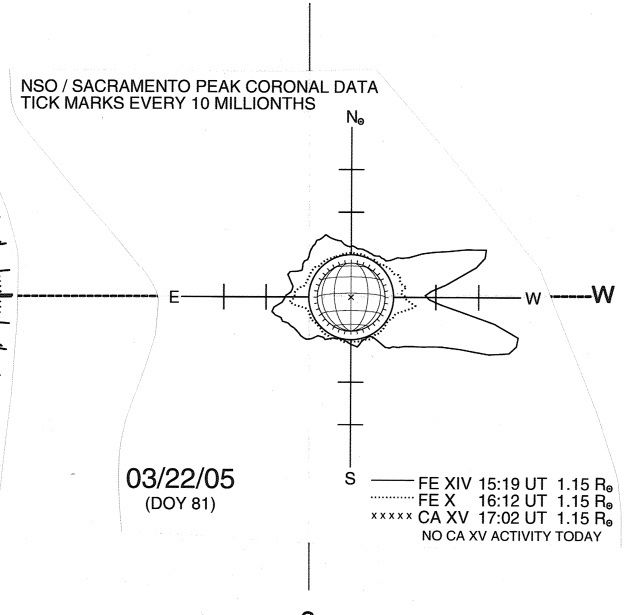

S