MARCH 21, 2005 (P= -25.28, Bo = -7.02, Lo = 53.38)

KITT PEAK MAGNETOGRAM--SOLIS

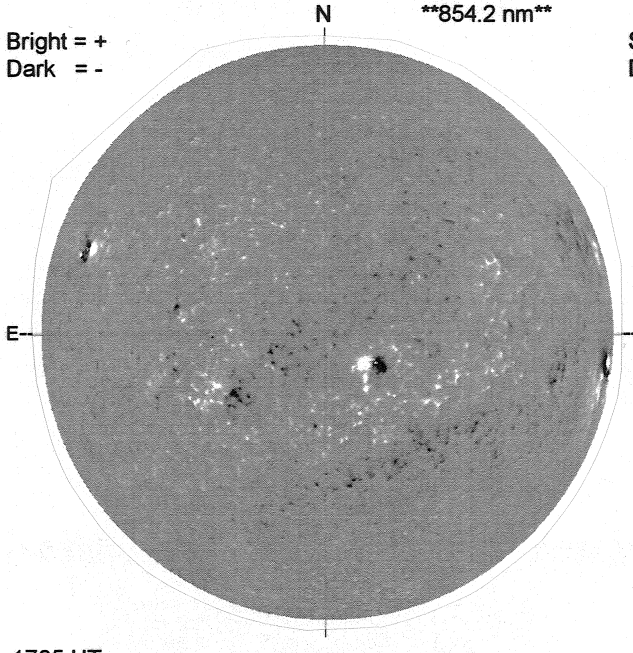

STANFORD MAGNETOGRAM

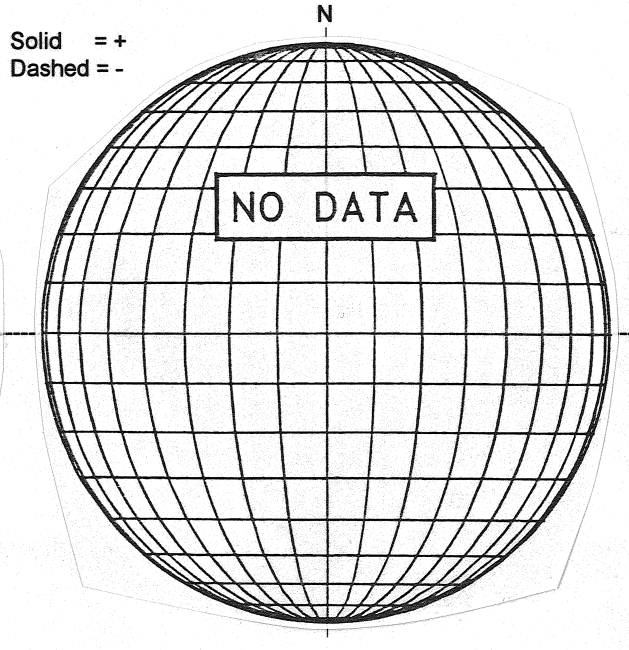

MT. WILSON MAGNETOGRAM

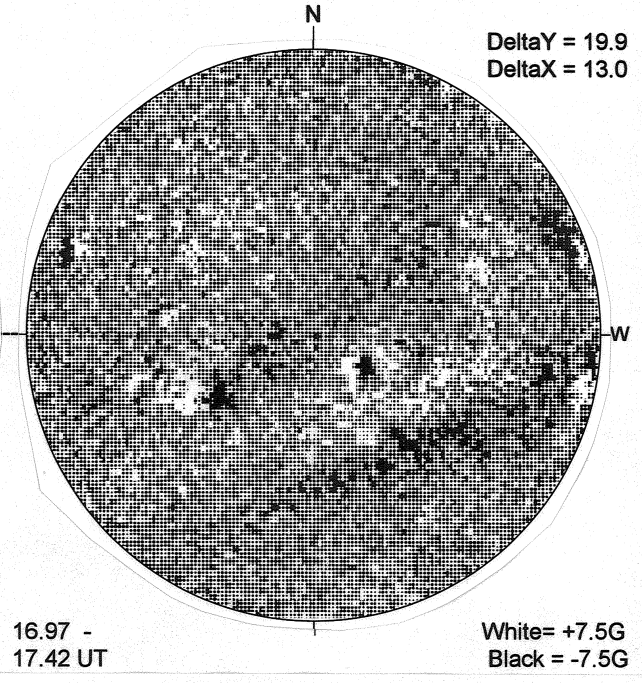

BIG BEAR H-ALPHA

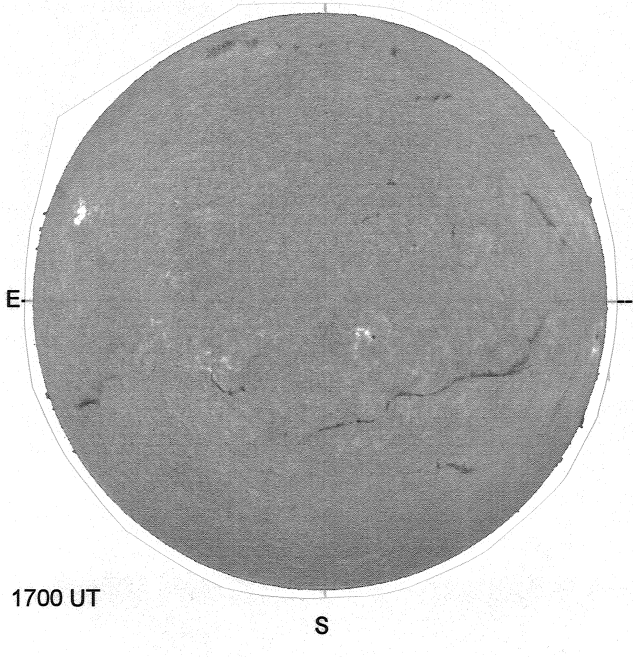

HOLLOMAN SUNSPOTS

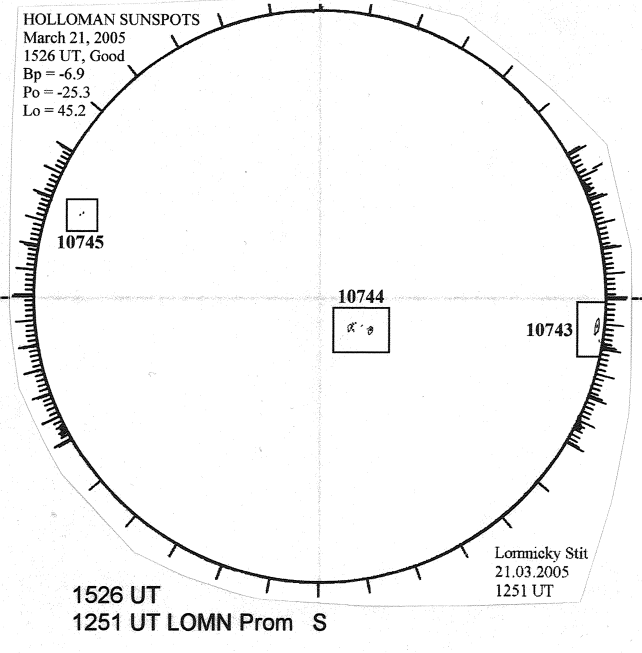
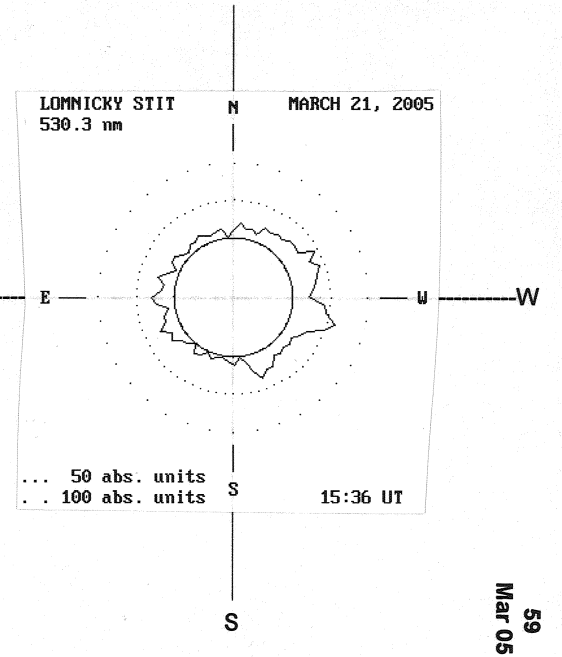
LOMNICKY PEAK CORONA (1.04 Radii)----