MARCH 18, 2005 (P= -24.89, Bo = -7.10, Lo = 92.93)

KITT PEAK MAGNETOGRAM--SOLIS

854.2 nm

Bright = +
Dark = -

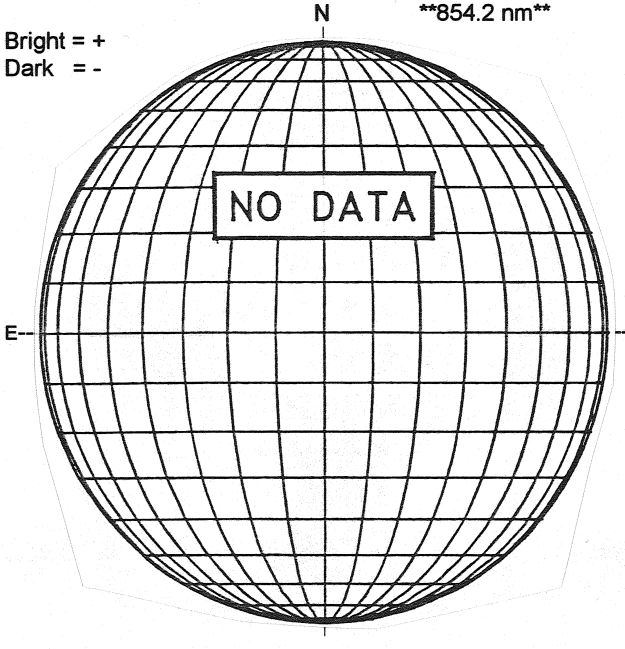

STANFORD MAGNETOGRAM

Solid = +
Dashed = -

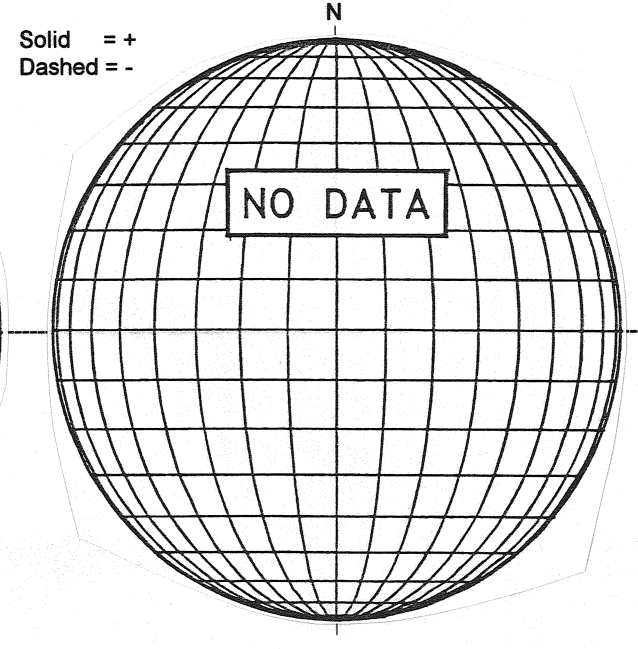

MT. WILSON MAGNETOGRAM

DeltaY =
DeltaX =

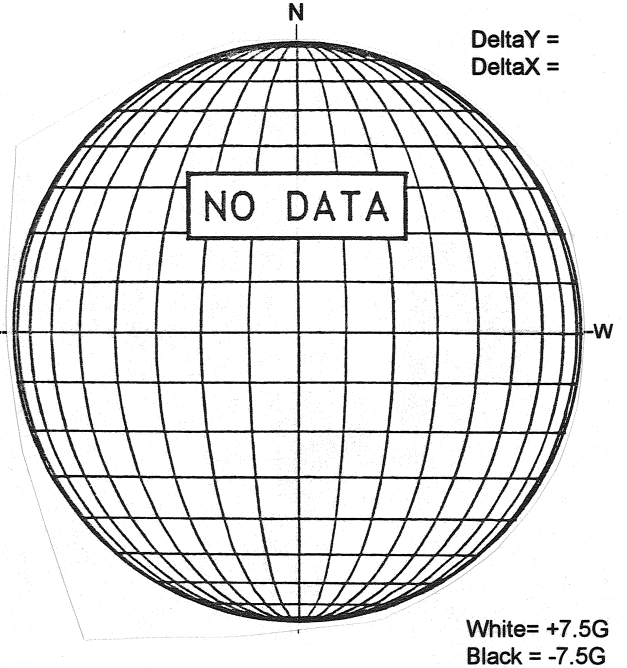

White= +7.5G
Black = -7.5G

KANZELHOHE H-ALPHA

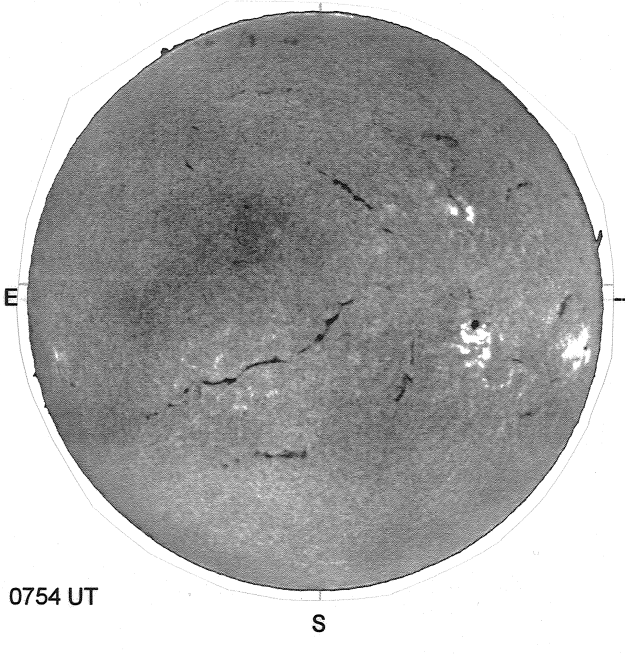

0754 UT

HOLLOMAN SUNSPOTS

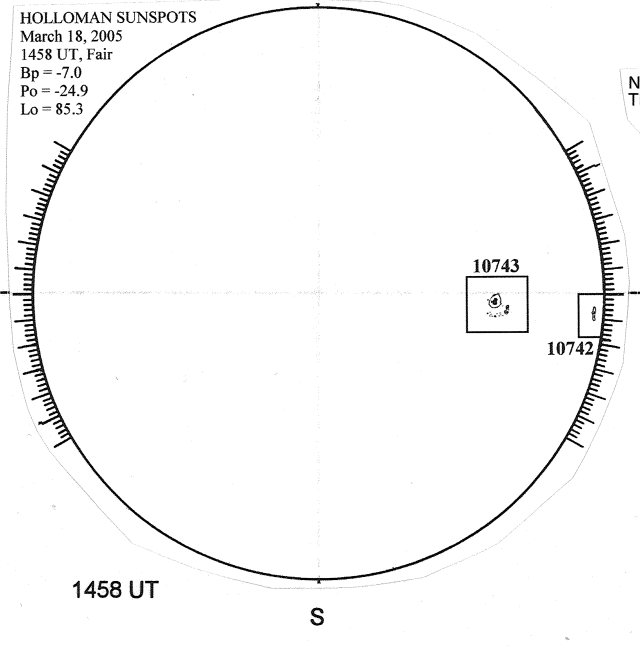

1458 UT
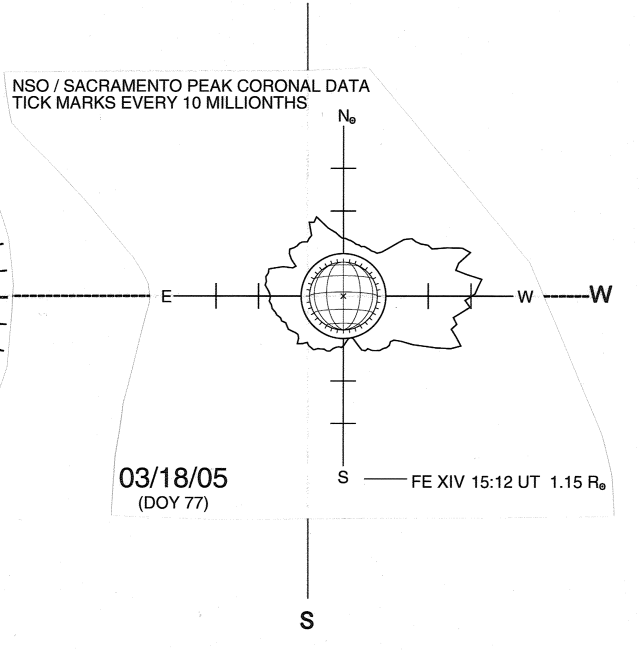
SACRAMENTO PEAK CORONA (1.15 Radii)----