MARCH 9, 2005 (P= -23.36, Bo = -7.24, Lo = 211.54)

KITT PEAK MAGNETOGRAM--SOLIS

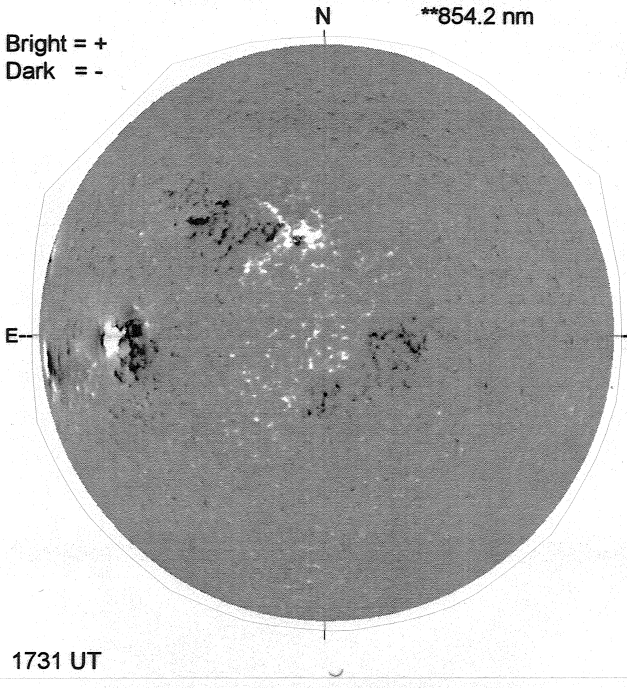

STANFORD MAGNETOGRAM

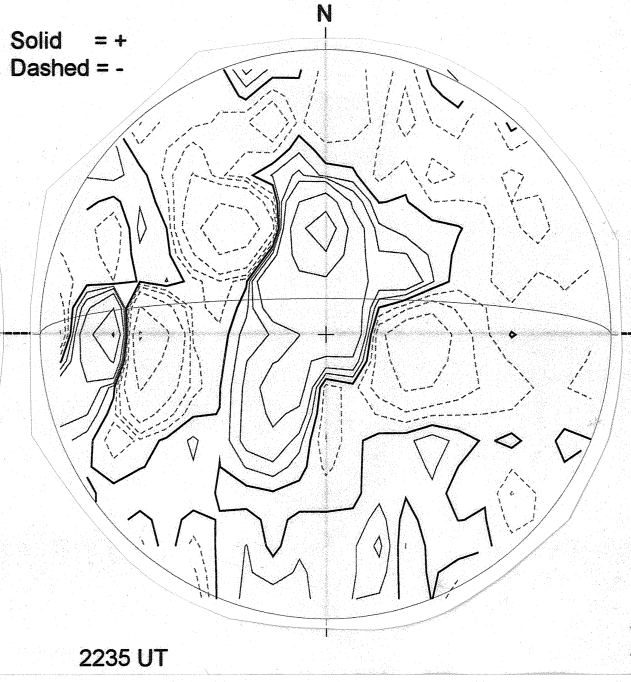

MT. WILSON MAGNETOGRAM

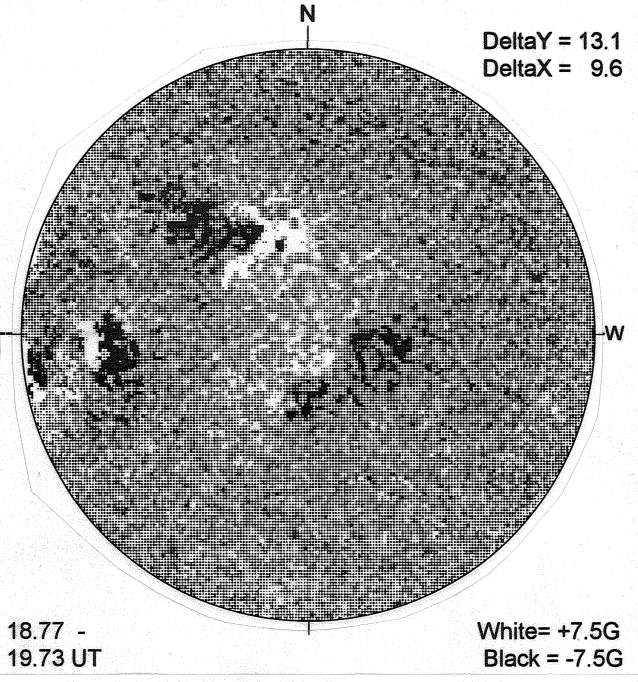

KANZELHOHE H-ALPHA

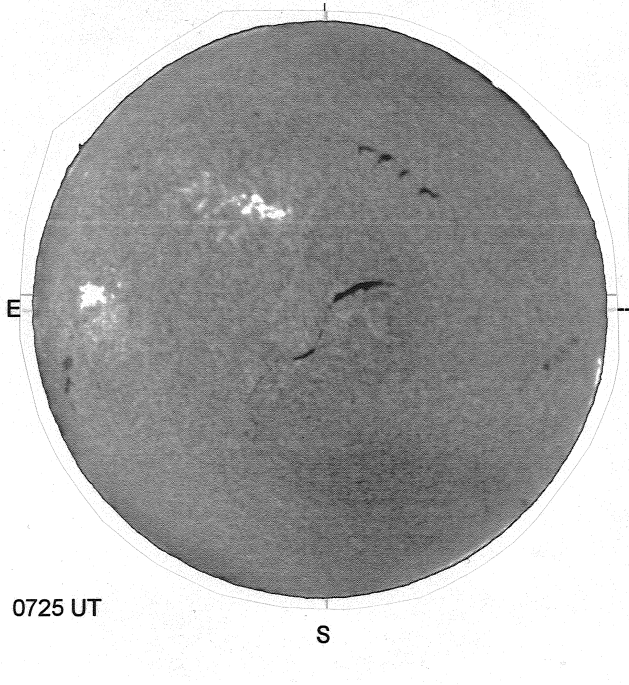

HOLLOMAN SUNSPOTS

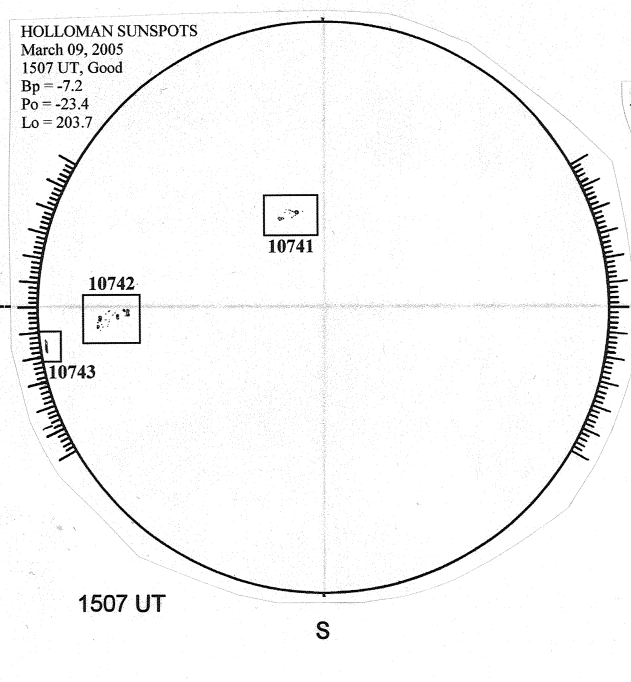

SACRAMENTO PEAK CORONA (1.15 Radii)

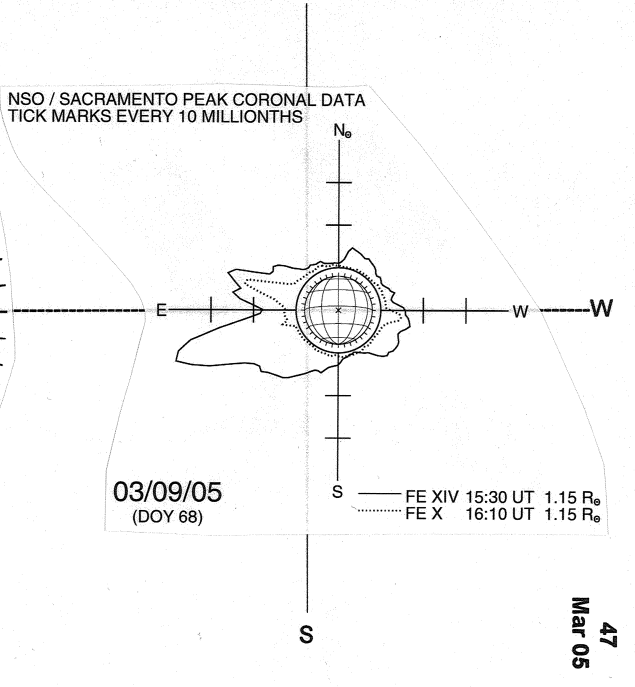

47
Mar 05