MARCH 8, 2005 (P= -23.16, Bo = -7.25, Lo = 224.72)

KITT PEAK MAGNETOGRAM--SOLIS

854.2 nm

Bright = +
Dark = -

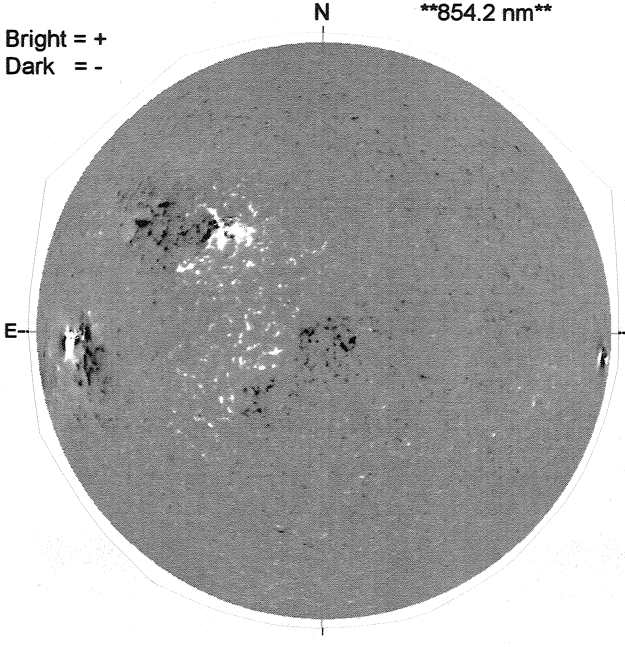

1650 UT

STANFORD MAGNETOGRAM

Solid = +
Dashed = -

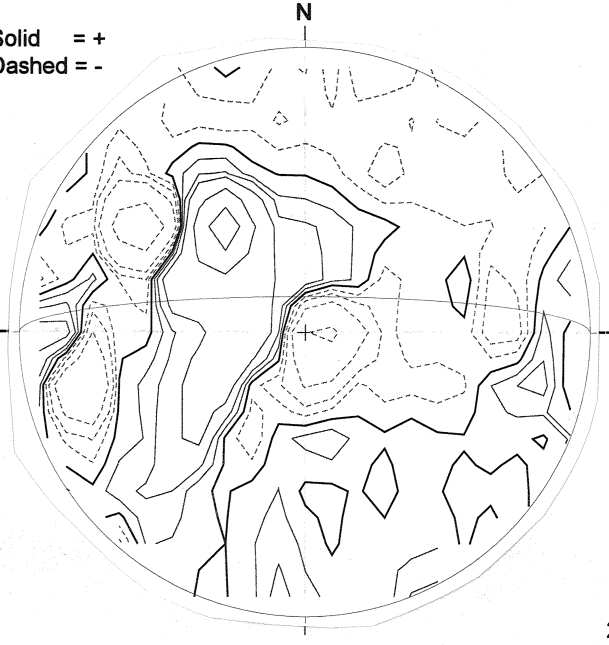

1948 UT

MT. WILSON MAGNETOGRAM

DeltaY = 13.1
DeltaX = 9.6

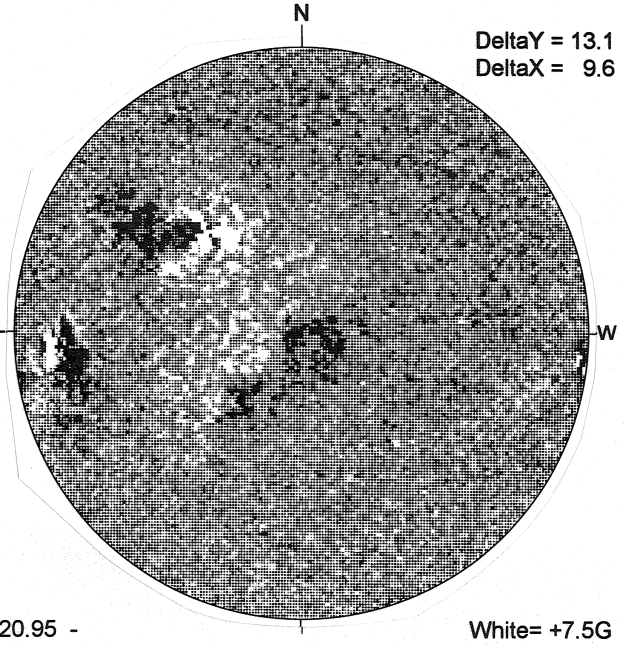

20.95 -
21.91 UT

White= +7.5G
Black = -7.5G

KANZELHOHE H-ALPHA

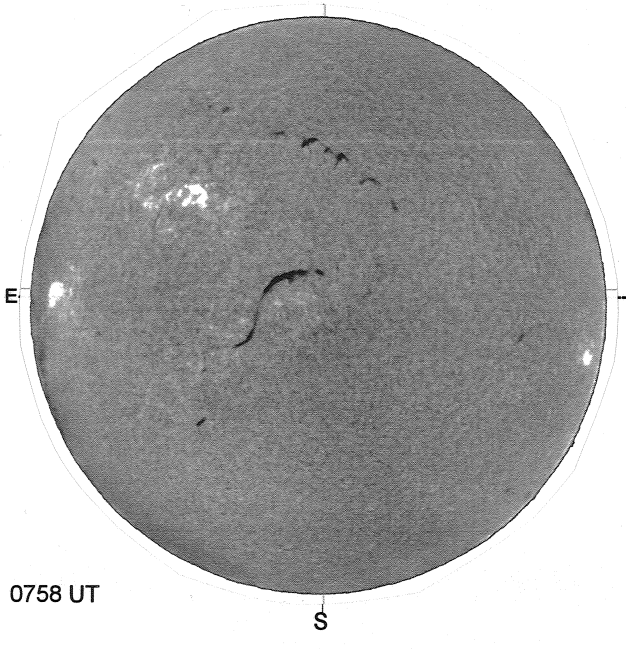

0758 UT

HOLLOMAN SUNSPOTS

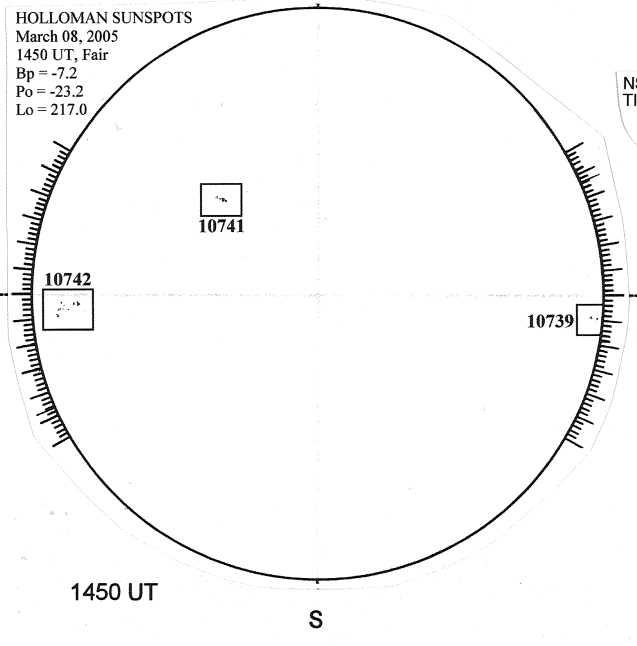

1450 UT
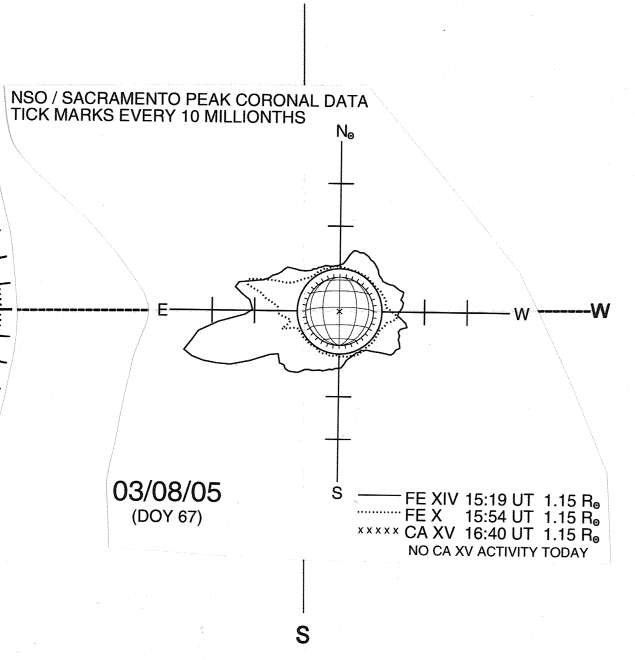
SACRAMENTO PEAK CORONA (1.15 Radii)