**MARCH 7, 2005 ( P= -22.95, Bo = -7.25, Lo = 237.89)**

KITT PEAK MAGNETOGRAM--SOLIS

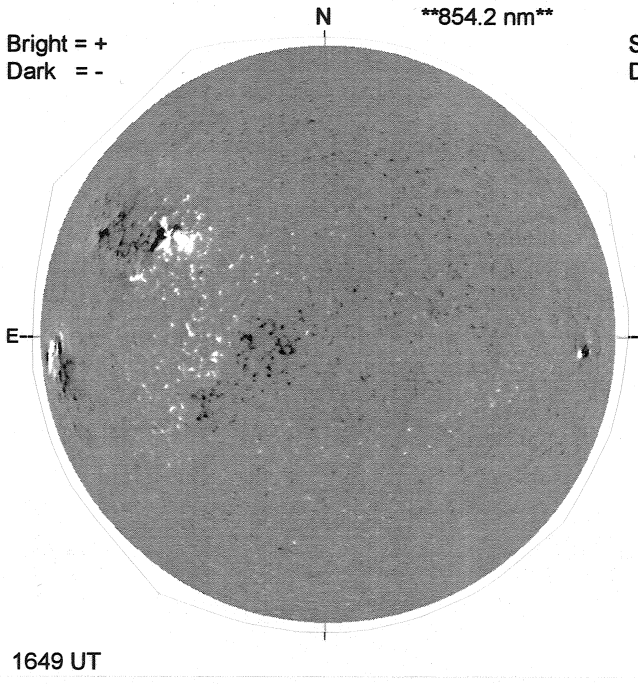


STANFORD MAGNETOGRAM

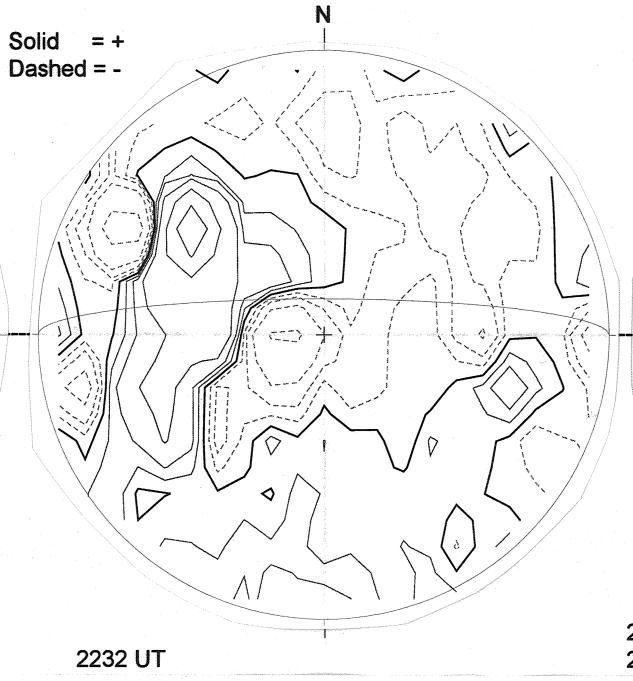


MT. WILSON MAGNETOGRAM

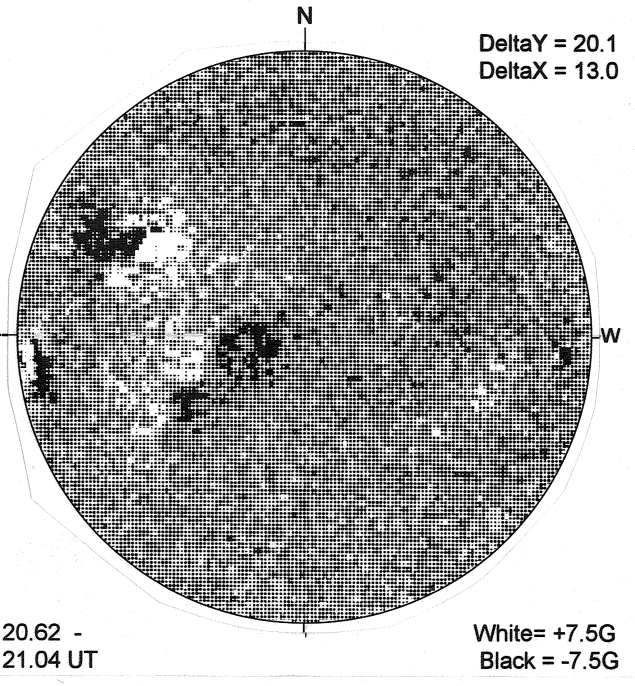


KANZELHOHE H-ALPHA

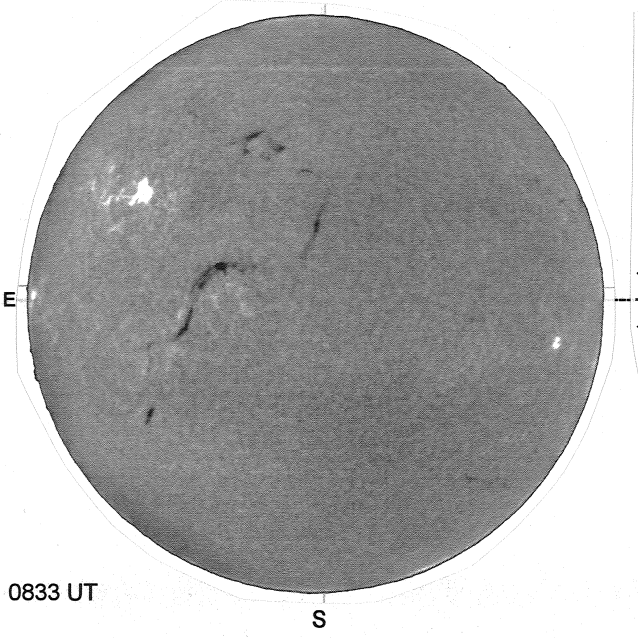


HOLLOMAN SUNSPOTS

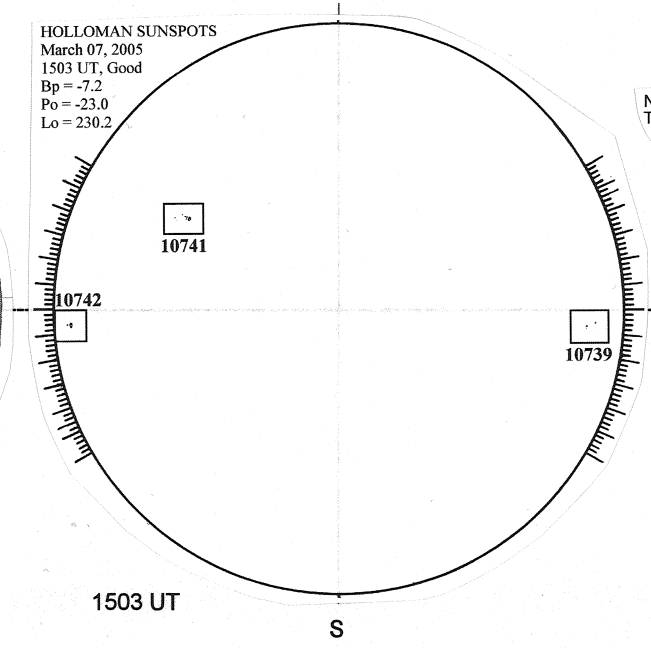


SACRAMENTO PEAK CORONA (1.15 Radii)----

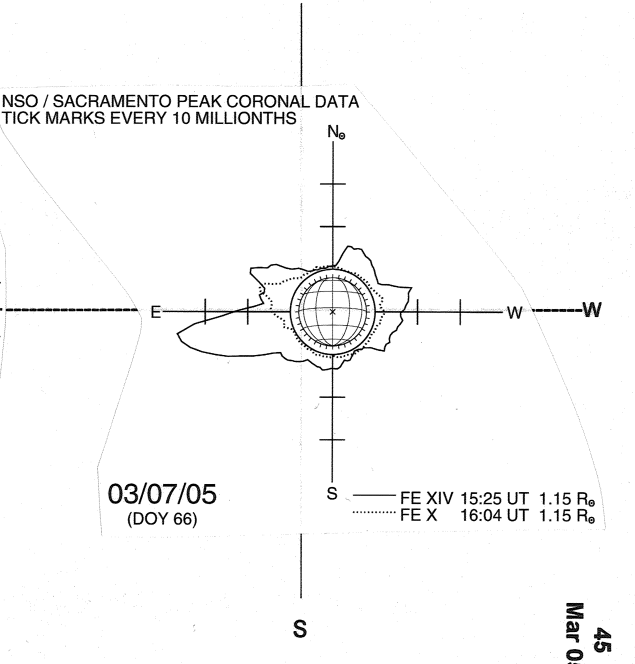


45
Mar 05