MARCH 4, 2005 (P= -22.28, Bo = -7.25, Lo = 277.42)

KITT PEAK MAGNETOGRAM--SOLIS

854.2 nm

Bright = +
Dark = -

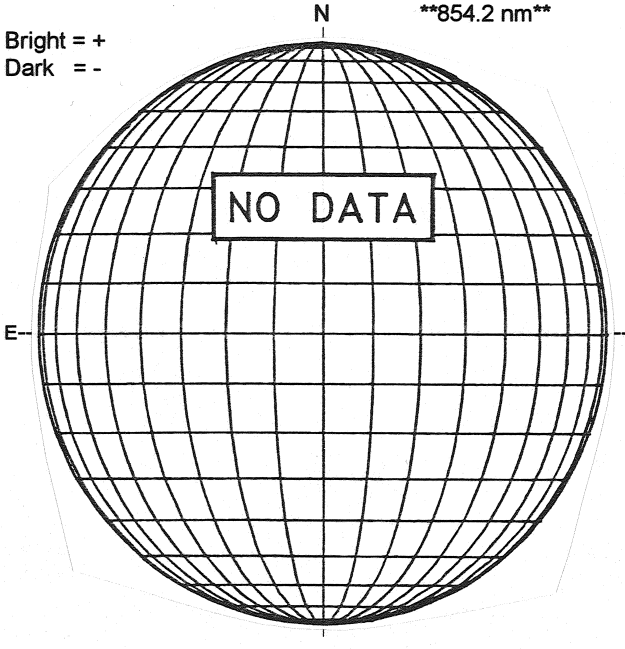

STANFORD MAGNETOGRAM

Solid = +
Dashed = -

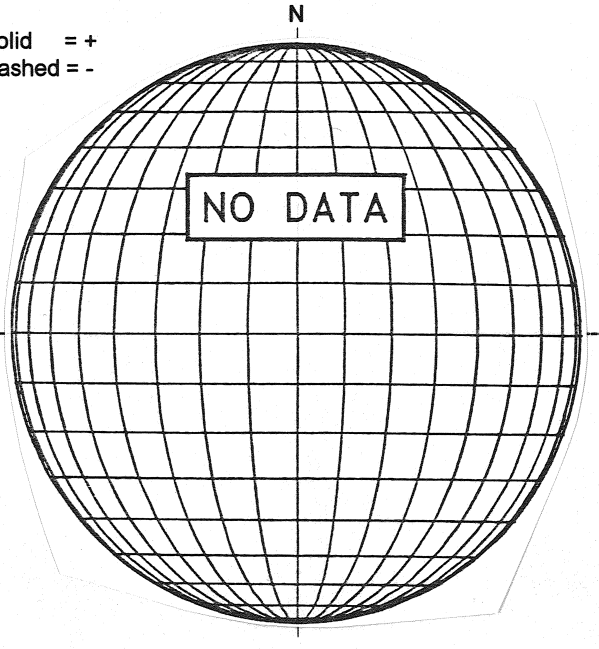

MT. WILSON MAGNETOGRAM

DeltaY =
DeltaX =

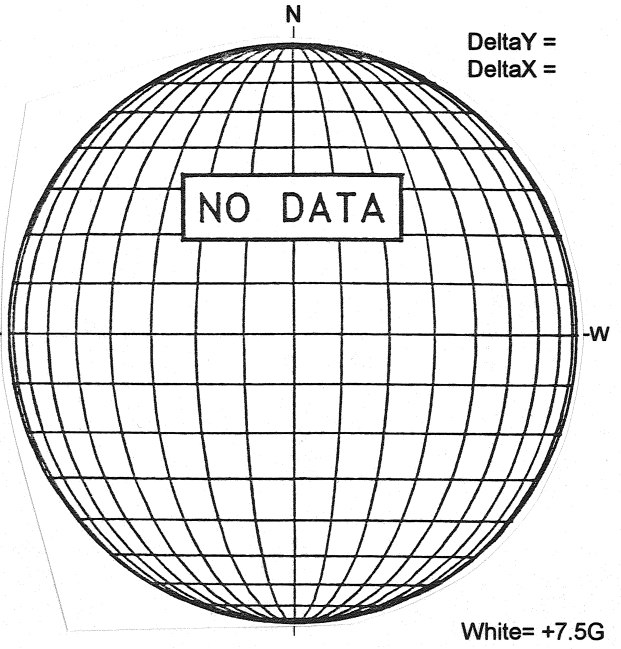

White= +7.5G
Black = -7.5G

KANZELHOHE H-ALPHA

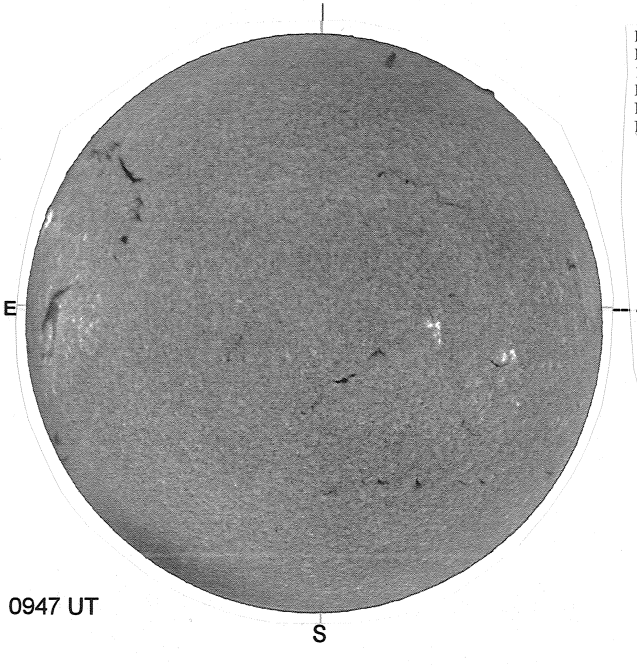

0947 UT

HOLLOMAN SUNSPOTS

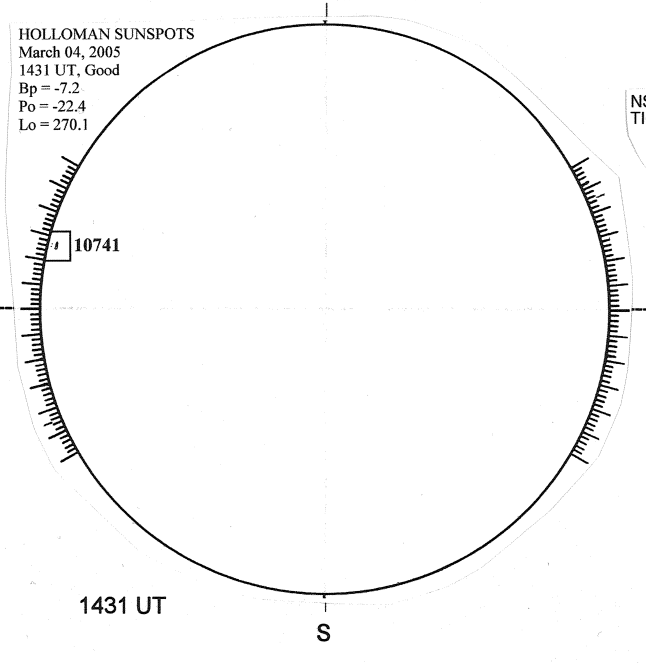

1431 UT
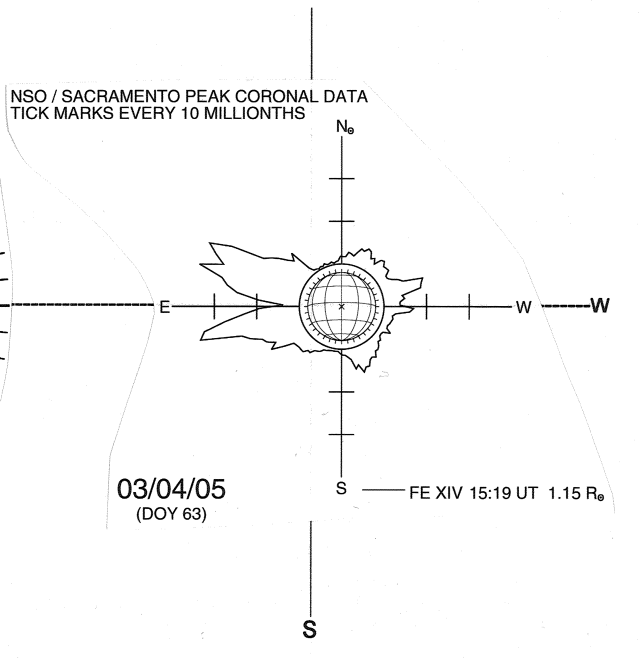
SACRAMENTO PEAK CORONA (1.15 Radii)