MARCH 2, 2005 (P= -21.80, Bo = -7.23, Lo = 303.77)

KITT PEAK MAGNETOGRAM--SOLIS

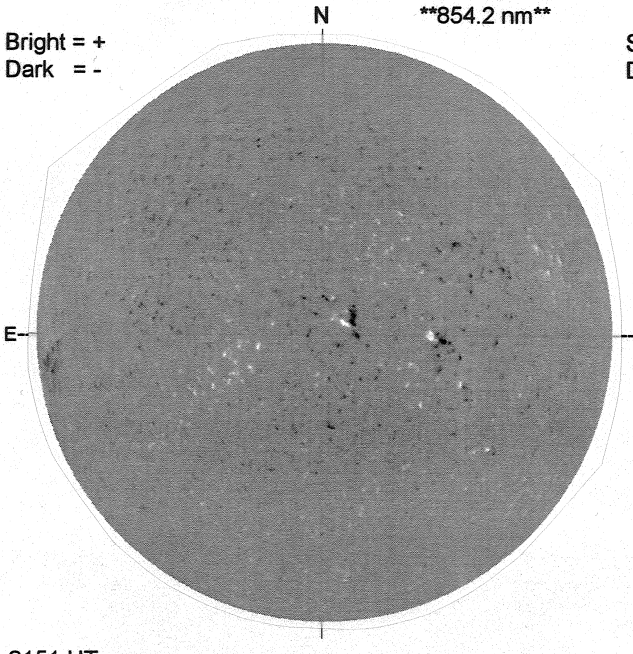

STANFORD MAGNETOGRAM

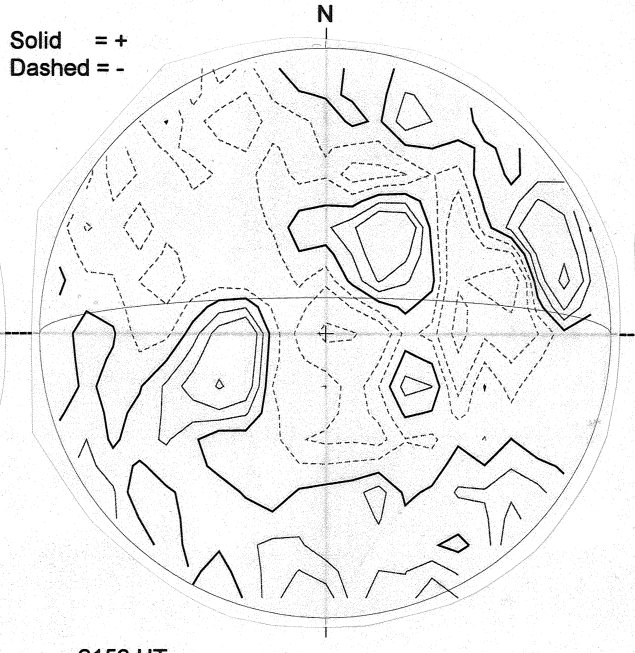

MT. WILSON MAGNETOGRAM

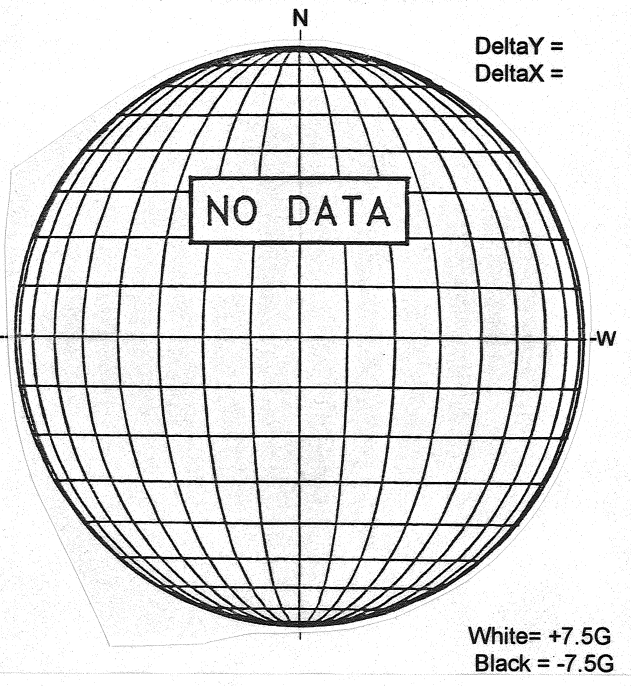

KANZELHOHE H-ALPHA

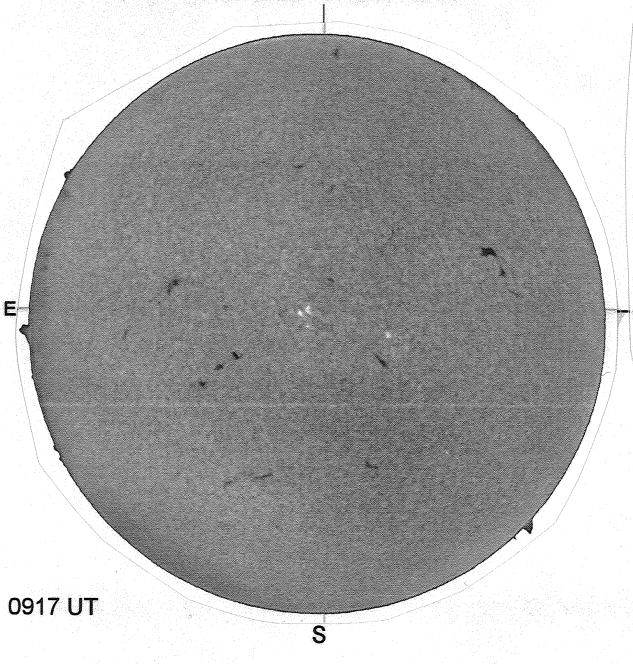

HOLLOMAN SUNSPOTS

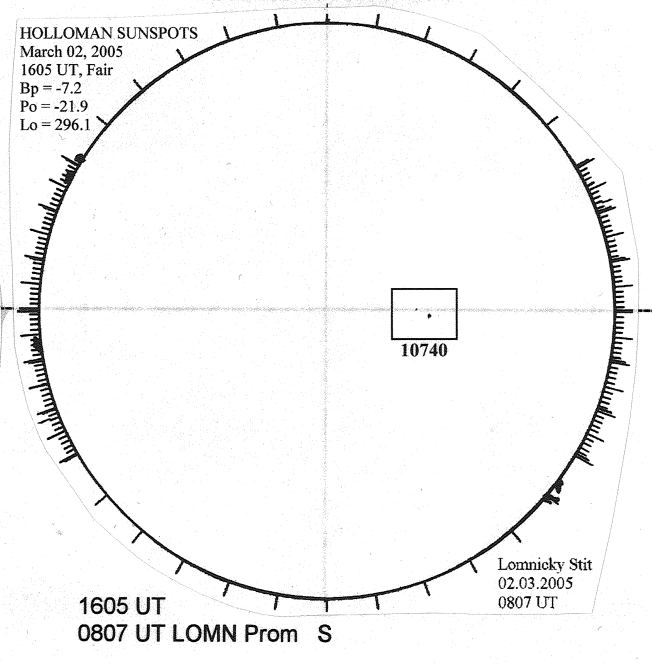
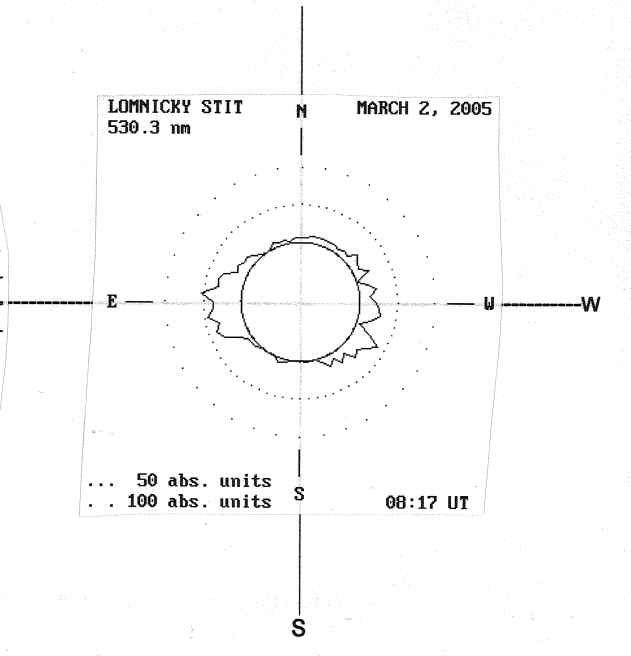
LOMNICKY PEAK CORONA (1.04 Radii)----