FEBRUARY 7, 2005 (P= -14.58, Bo = -6.43, Lo = 246.66)

KITT PEAK MAGNETOGRAM--SOLIS

Bright = +
Dark = -

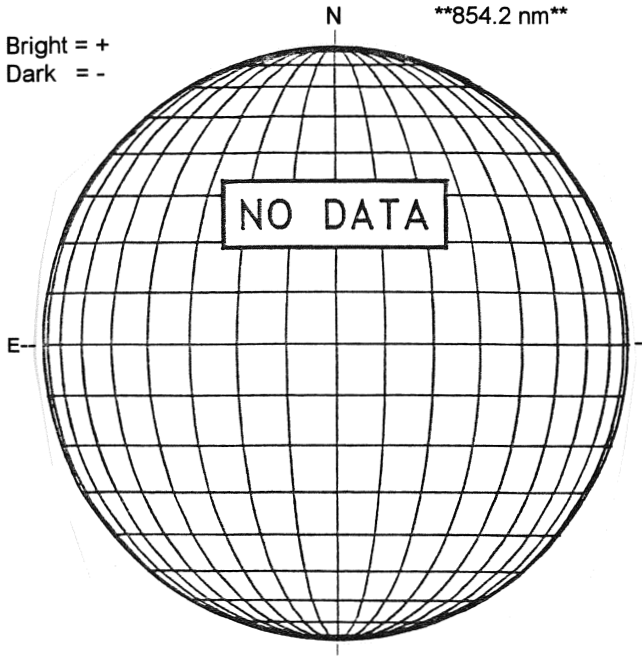

STANFORD MAGNETOGRAM

Solid = +
Dashed = -

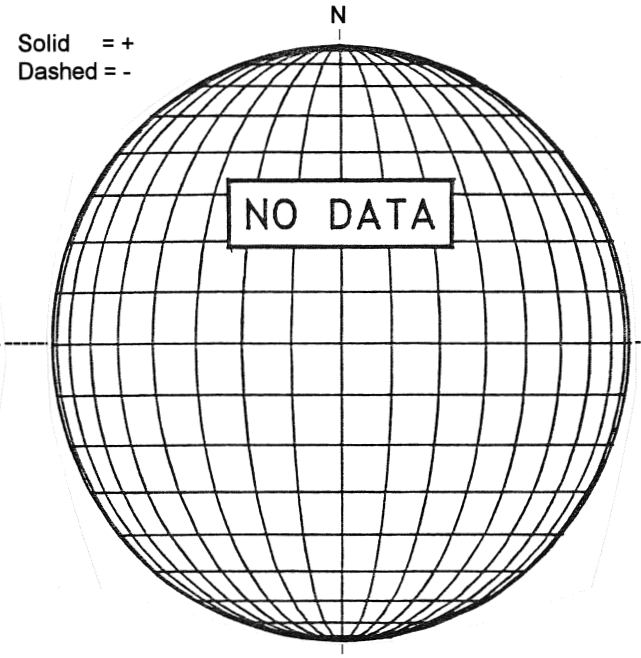

MT. WILSON MAGNETOGRAM

DeltaY =
DeltaX =

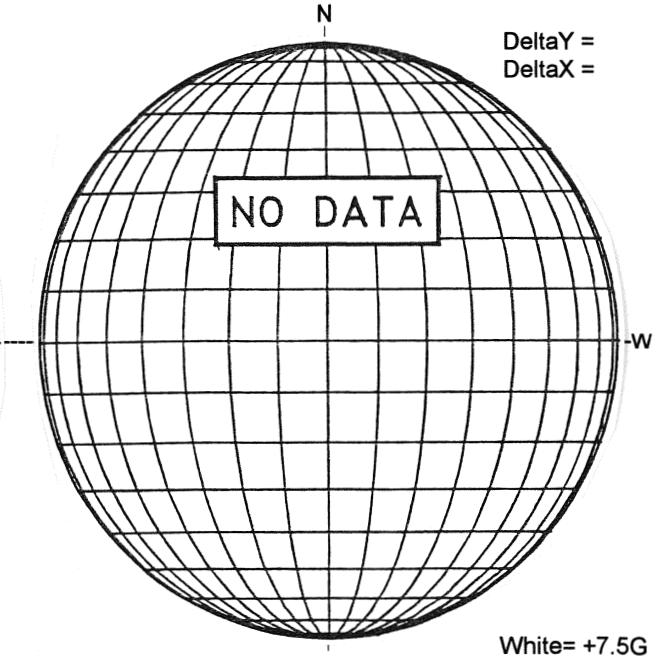

White= +7.5G
Black = -7.5G

BIG BEAR H-ALPHA

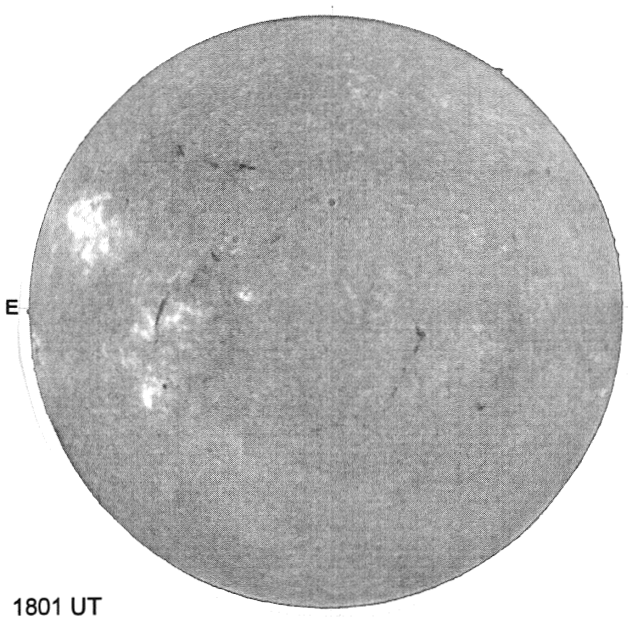

1801 UT

S

HOLLOMAN SUNSPOTS

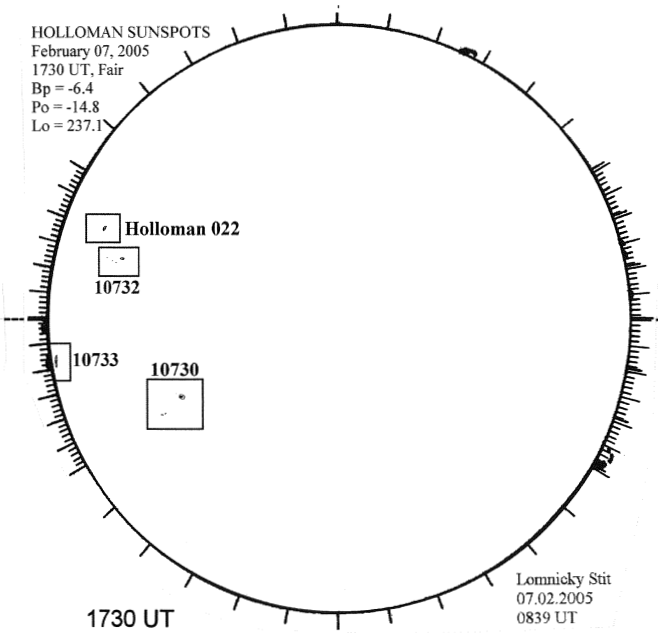

1730 UT
0839 UT LOMN Prom S
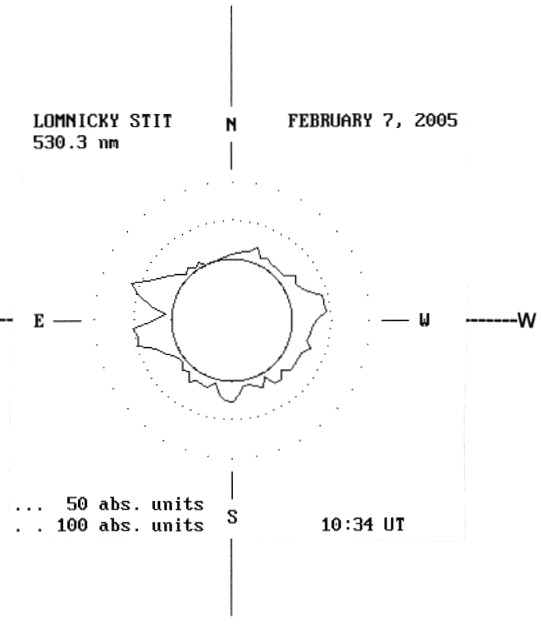
LOMNICKY PEAK CORONA (1.04 Radii)----