FEBRUARY 3, 2005 (P= -13.02, Bo = -6.17, Lo = 299.32)

KITT PEAK MAGNETOGRAM--SOLIS

630.2 nm

Bright = +
Dark = -

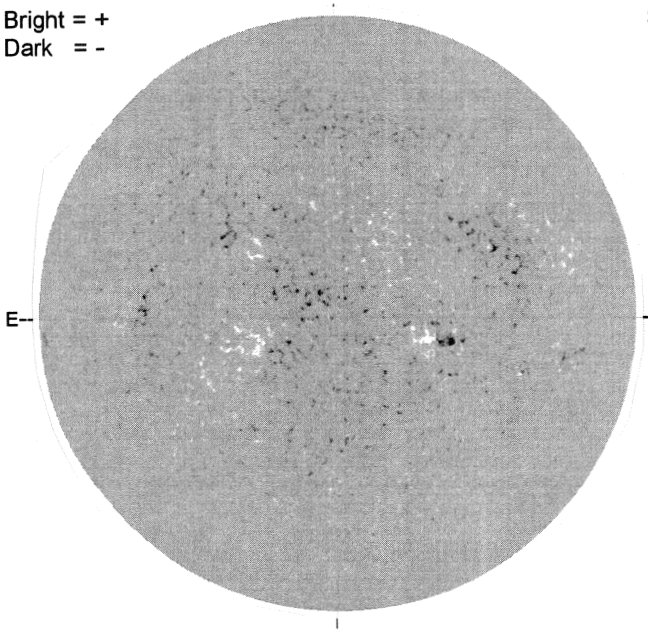

1710 UT

STANFORD MAGNETOGRAM

Solid = +
Dashed = -

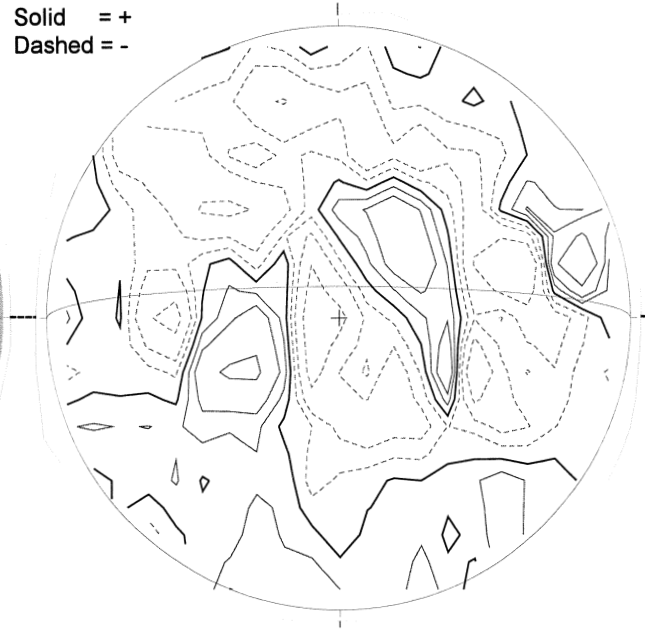

2222 UT

MT. WILSON MAGNETOGRAM

DeltaY = 13.1
DeltaX = 9.6

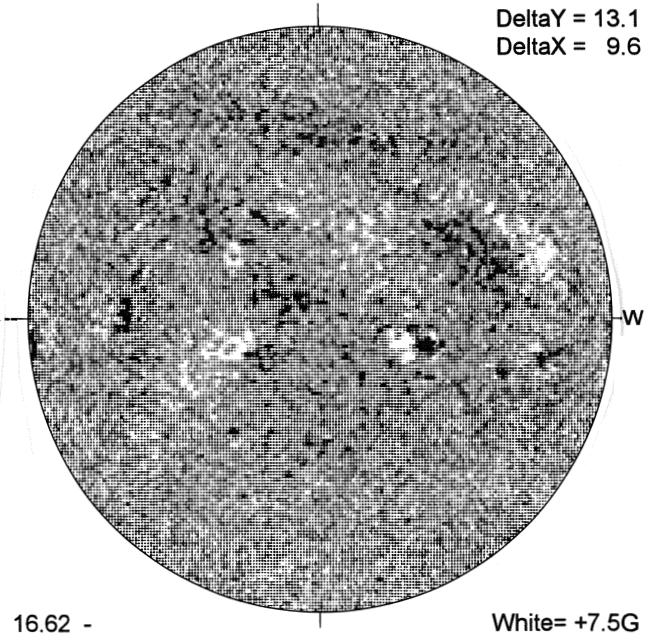

16.62 -
17.58 UT

White= +7.5G
Black = -7.5G

KANZELHOHE H-ALPHA

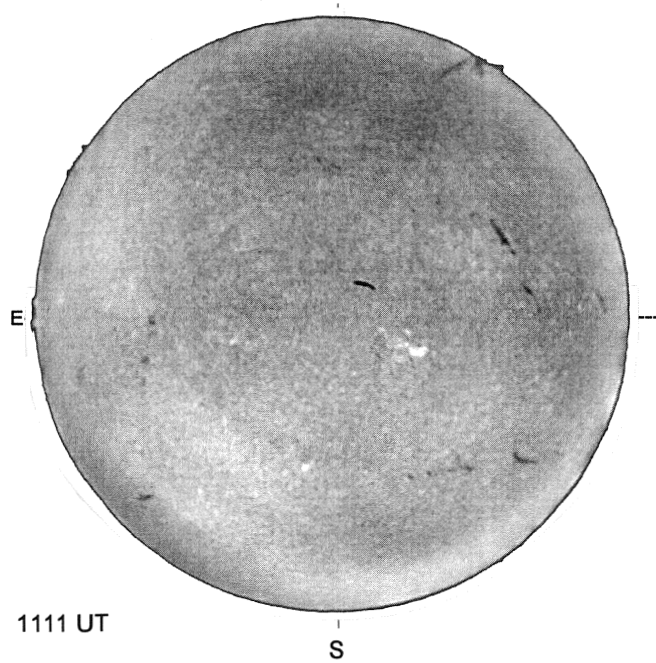

1111 UT

HOLLOMAN SUNSPOTS

HOLLOMAN SUNSPOTS
February 03, 2005
1520 UT, Fair
Bp = -6.2
Po = -13.2
Lo = 291.2

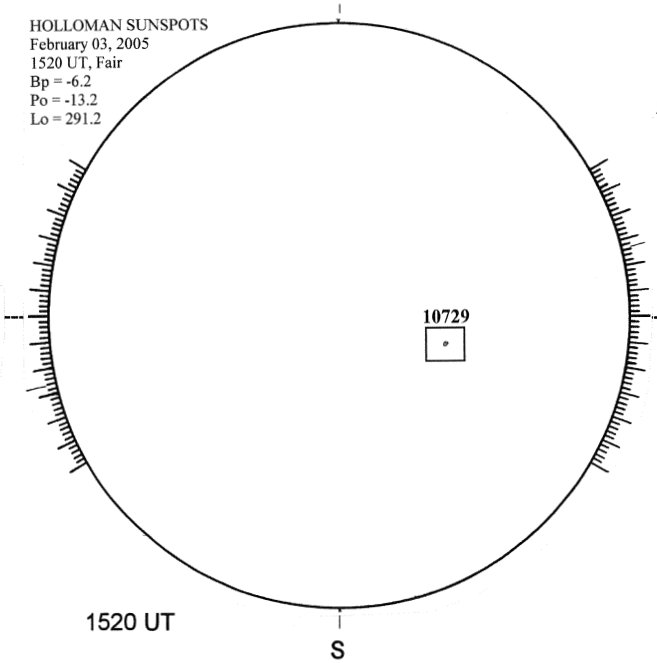

1520 UT

SACRAMENTO PEAK CORONA (1.15 Radii)----

NSO / SACRAMENTO PEAK CORONAL DATA
TICK MARKS EVERY 10 MILLIONTHS

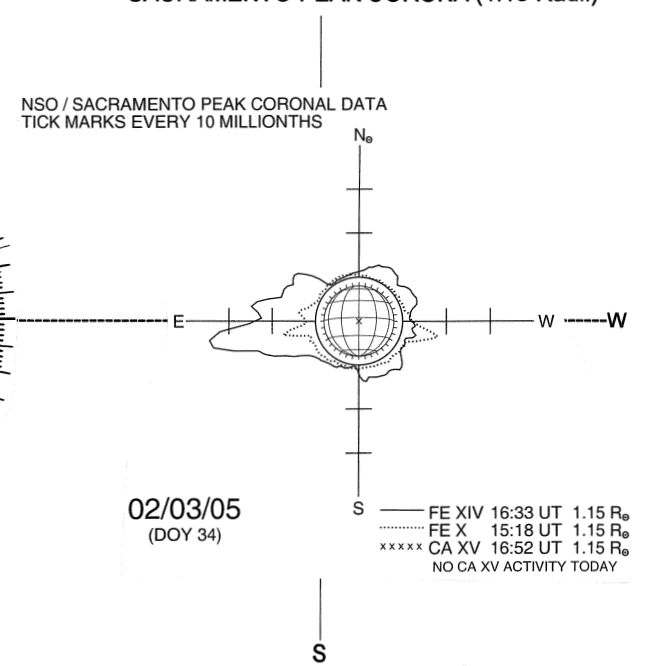

02/03/05
(DOY 34)

FE XIV 16:33 UT 1.15 R⊙
FE X 15:18 UT 1.15 R⊙
CA XV 16:52 UT 1.15 R⊙
NO CA XV ACTIVITY TODAY