JANUARY 25, 2005 (P= -9.26, Bo = -5.49, Lo = 57.82)

KITT PEAK MAGNETOGRAM--SOLIS

854.2 nm

Bright = +
Dark = -

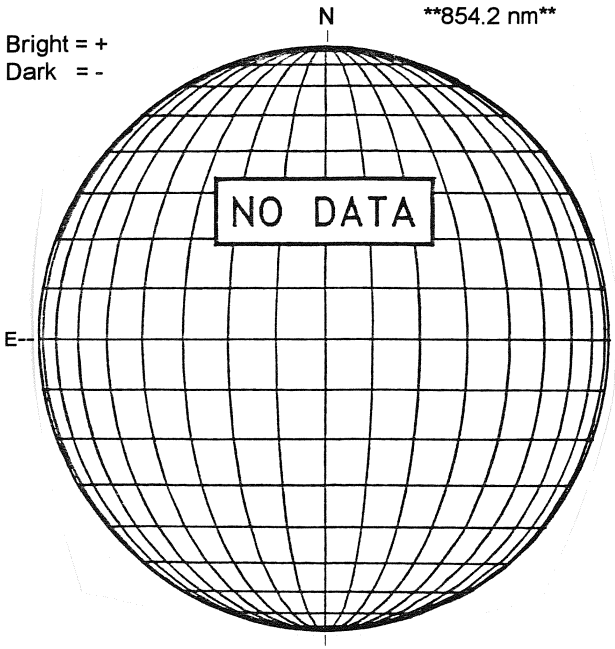

STANFORD MAGNETOGRAM

Solid = +
Dashed = -

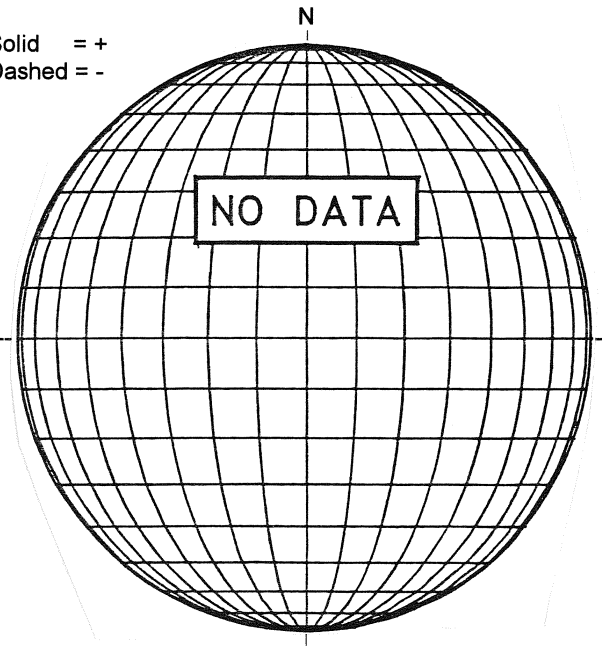

MT. WILSON MAGNETOGRAM

DeltaY =
DeltaX =

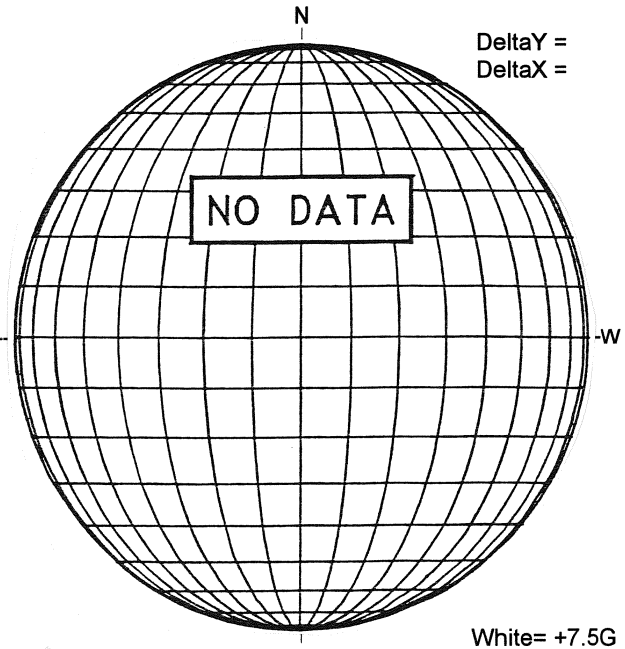

White= +7.5G
Black = -7.5G

MEUDON H-ALPHA

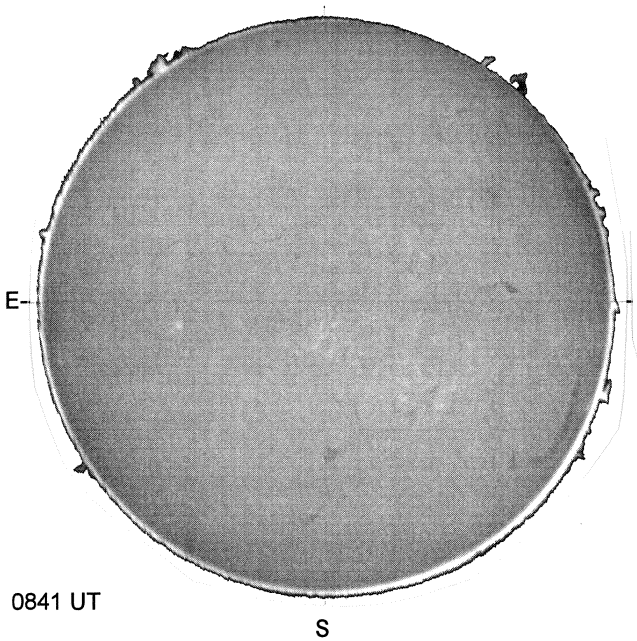

0841 UT

HOLLOMAN SUNSPOTS

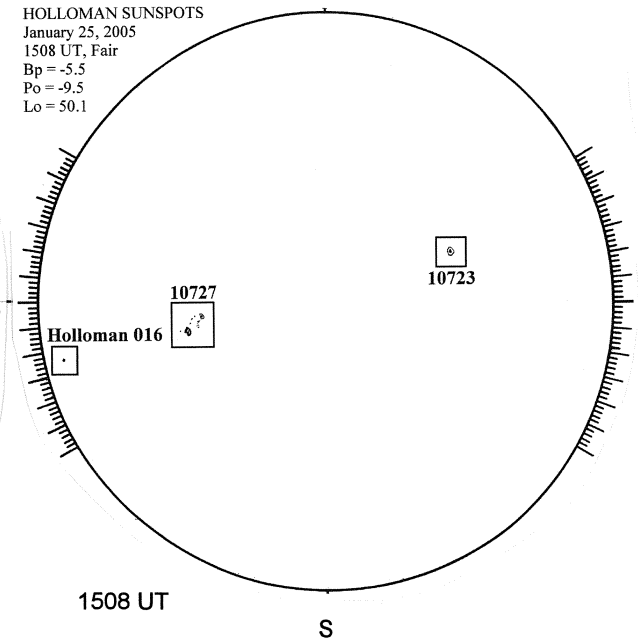

1508 UT
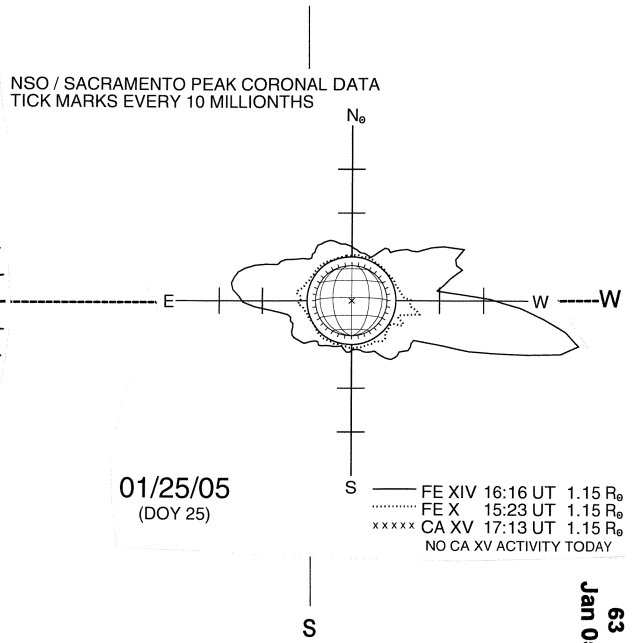
SACRAMENTO PEAK CORONA (1.15 Radii)----