JANUARY 24, 2005 (P= -8.82, Bo = -5.41, Lo = 70.99)

KITT PEAK MAGNETOGRAM--SOLIS

854.2 nm

Bright = +
Dark = -

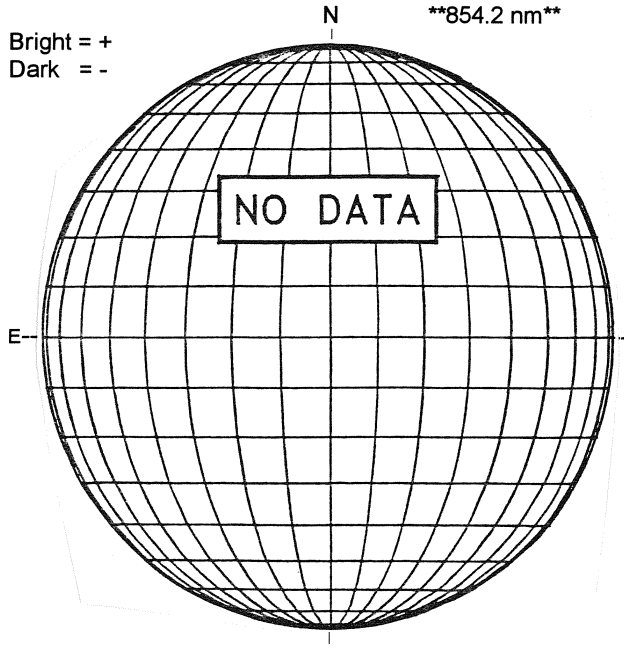

STANFORD MAGNETOGRAM

Solid = +
Dashed = -

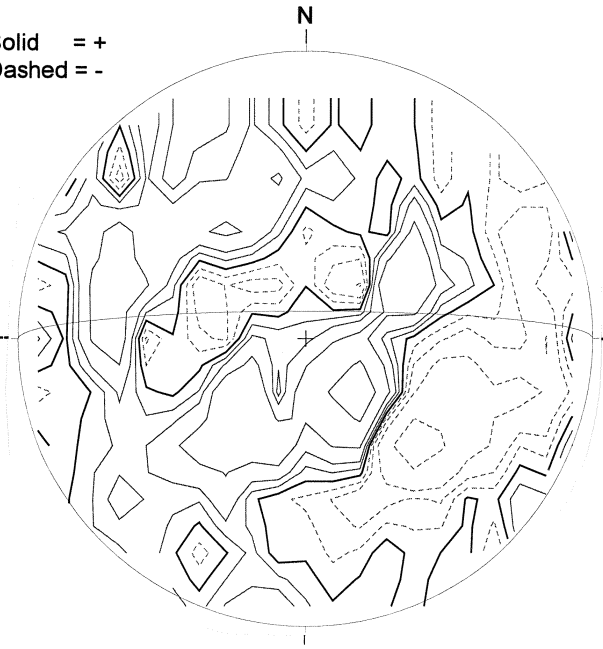

2238 UT

MT. WILSON MAGNETOGRAM

DeltaY =
DeltaX =

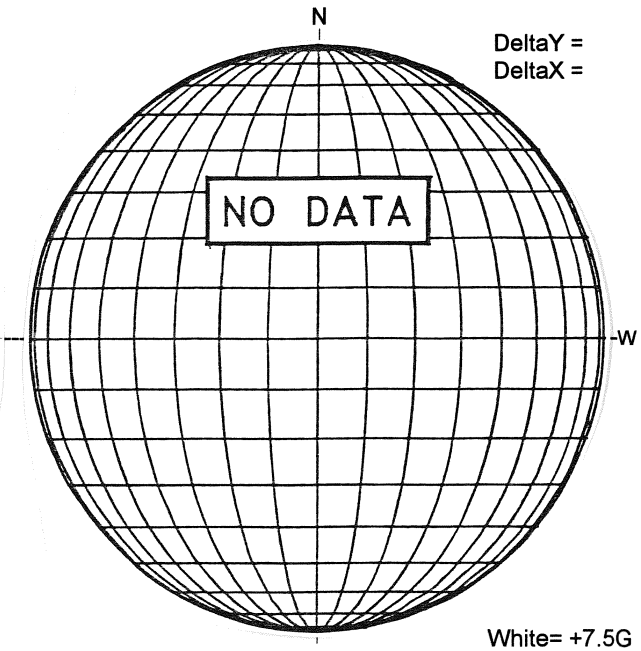

White= +7.5G
Black = -7.5G

----- BIG BEAR H-ALPHA

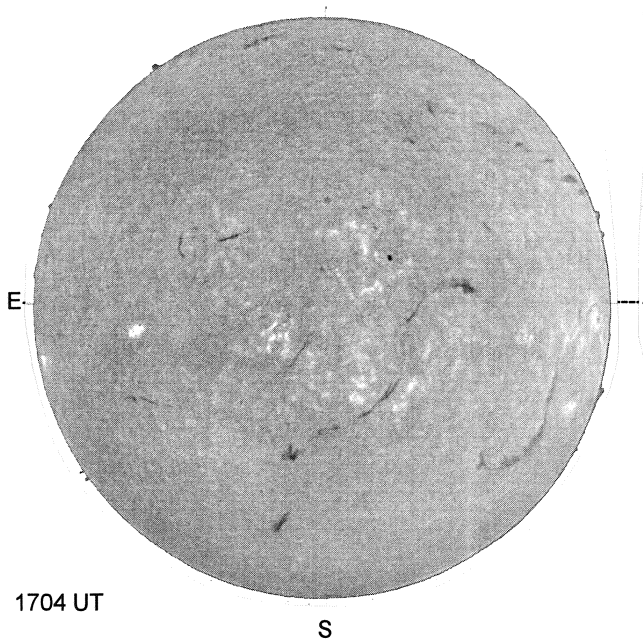

1704 UT

HOLLOMAN SUNSPOTS

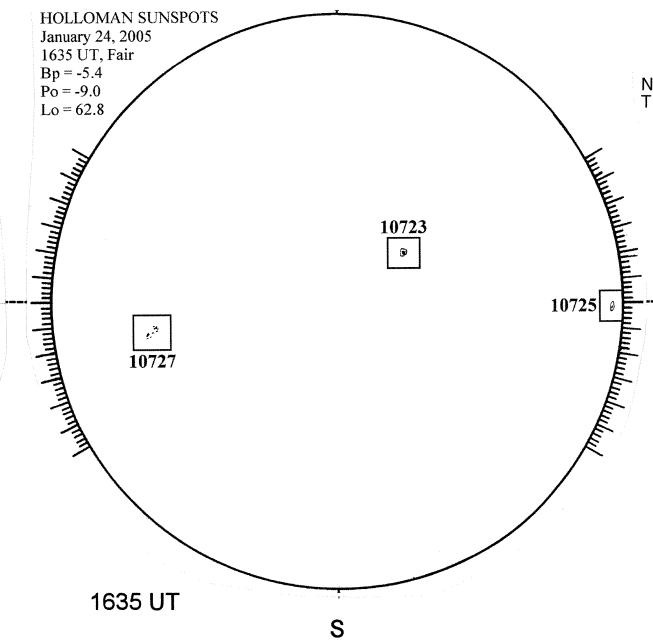

1635 UT
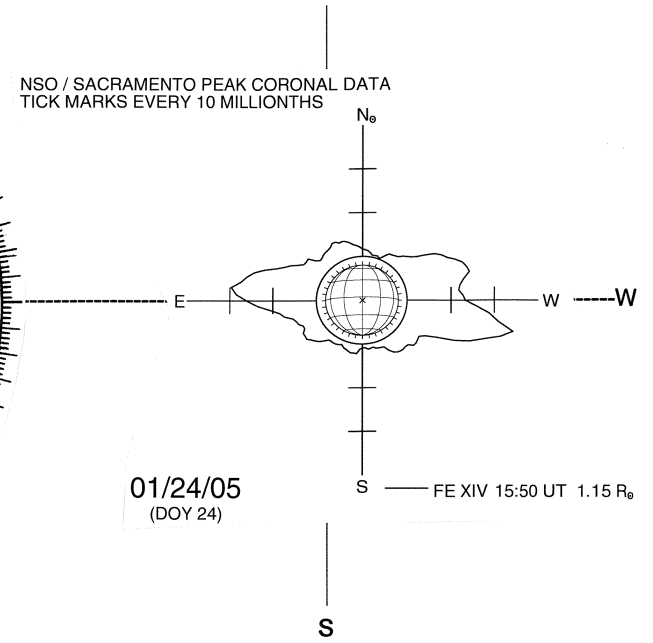
SACRAMENTO PEAK CORONA (1.15 Radii)----