**JANUARY 19, 2005 ( P= -6.58, Bo = -4.96, Lo = 136.83)**

KITT PEAK MAGNETOGRAM--SOLIS

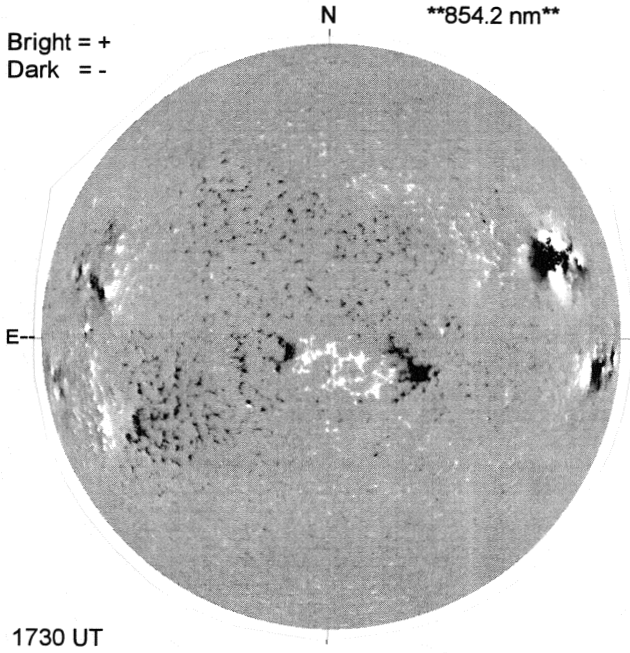


STANFORD MAGNETOGRAM

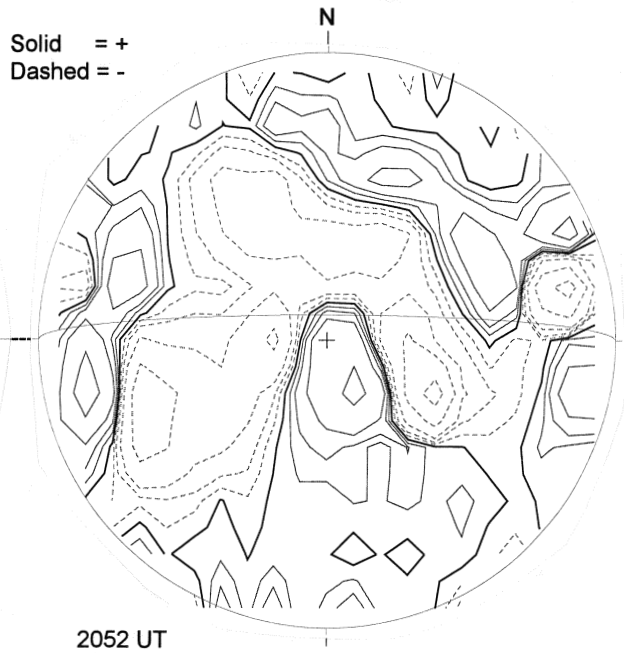


MT. WILSON MAGNETOGRAM

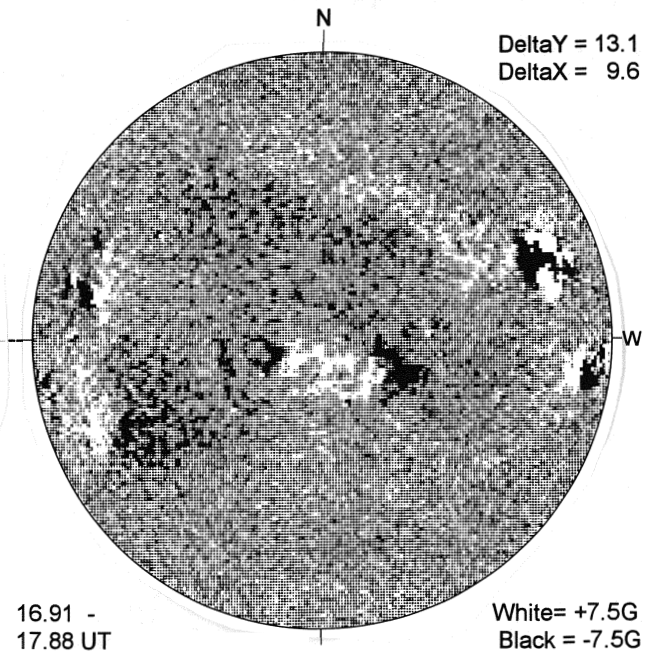


BIG BEAR H-ALPHA

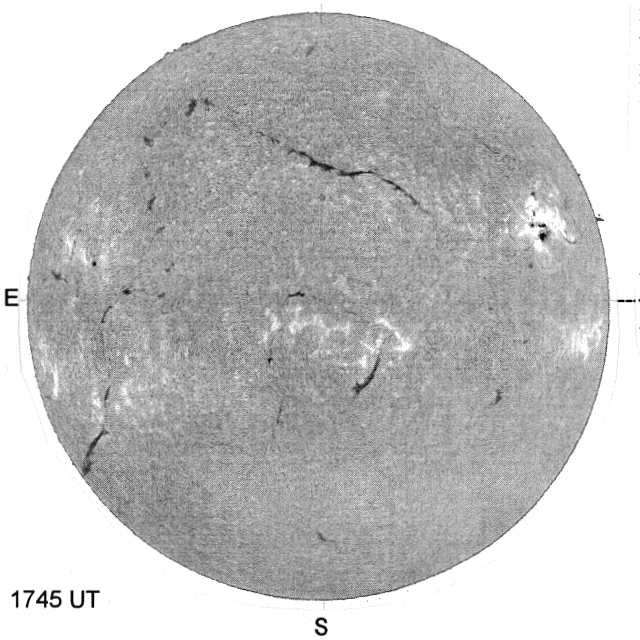


HOLLOMAN SUNSPOTS

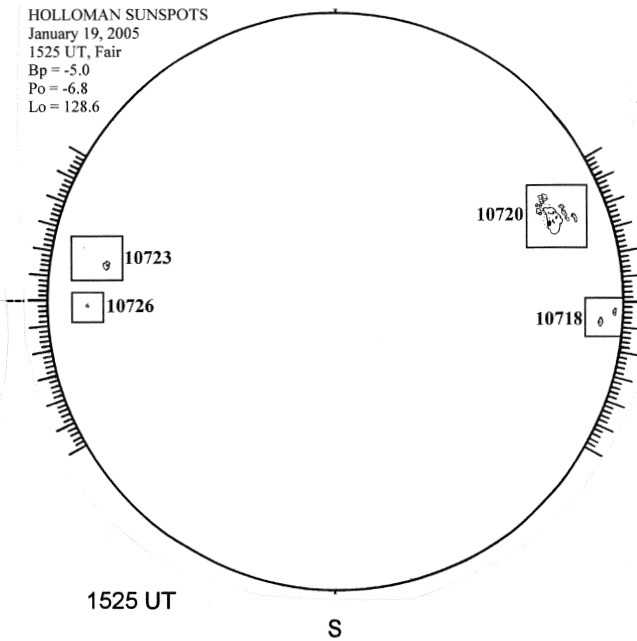

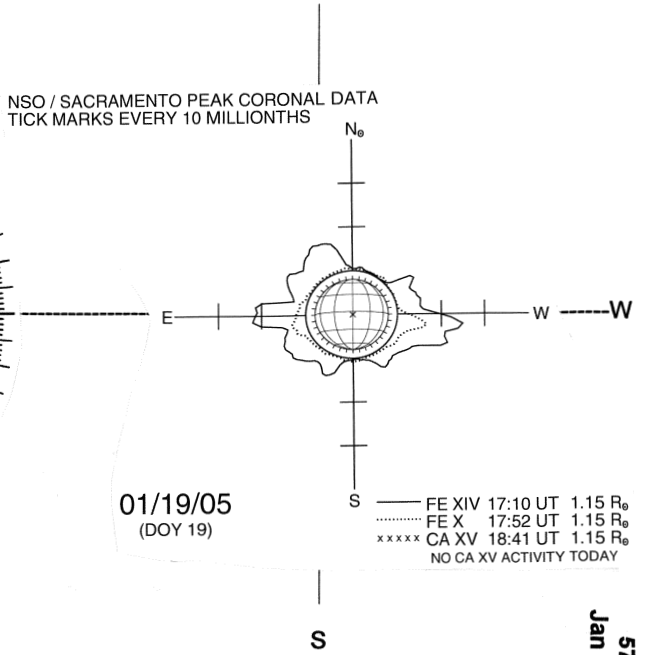
SACRAMENTO PEAK CORONA (1.15 Radii)----