JANUARY 10, 2005 (P= -2.35, Bo = -4.05 Lo = 255.33)

KITT PEAK MAGNETOGRAM--SOLIS

854.2 nm

Bright = +
Dark = -

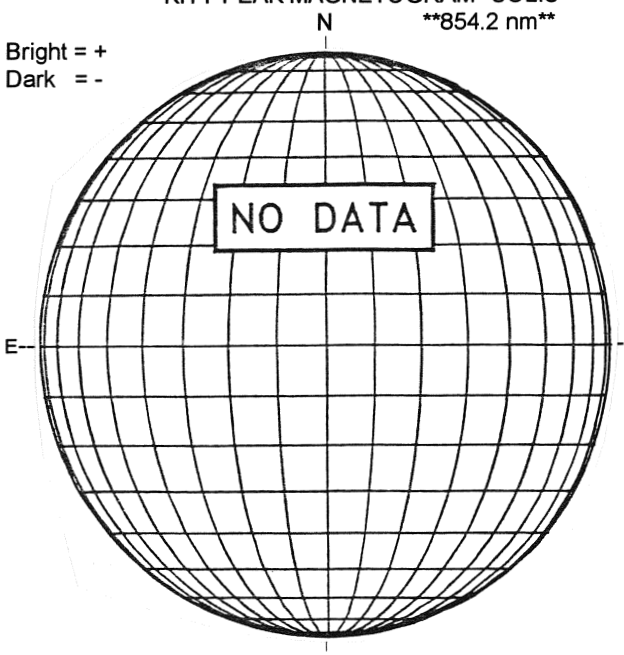

STANFORD MAGNETOGRAM

Solid = +
Dashed = -

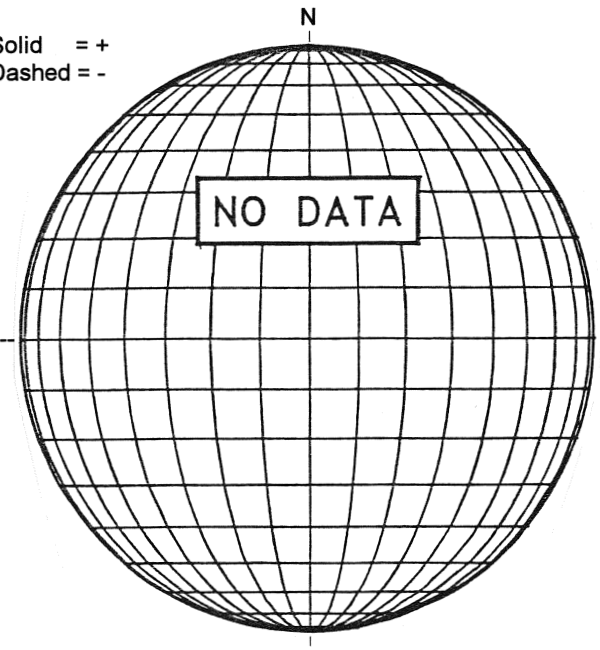

MT. WILSON MAGNETOGRAM

DeltaY =
DeltaX =

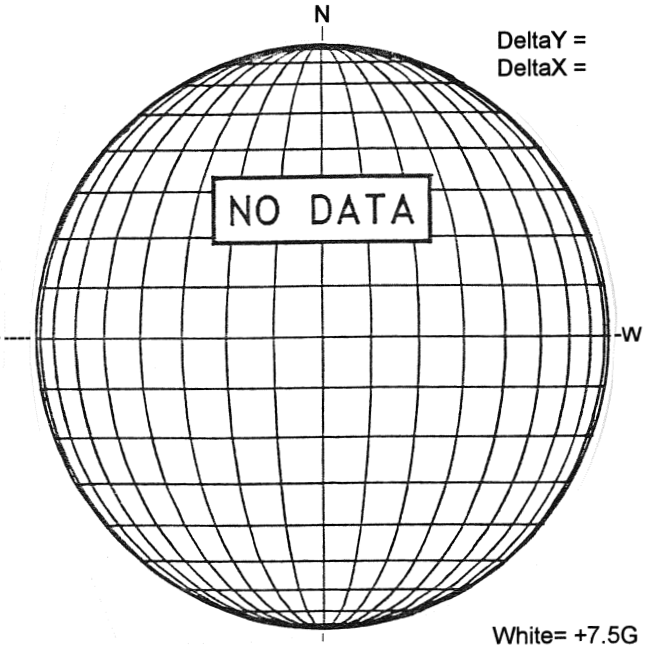

White= +7.5G
Black = -7.5G

KANZELHOHE H-ALPHA

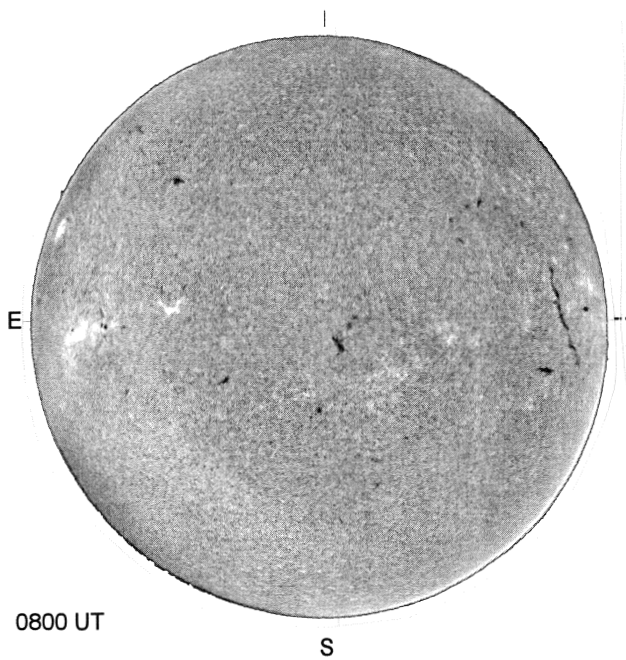

0800 UT

HOLLOMAN SUNSPOTS

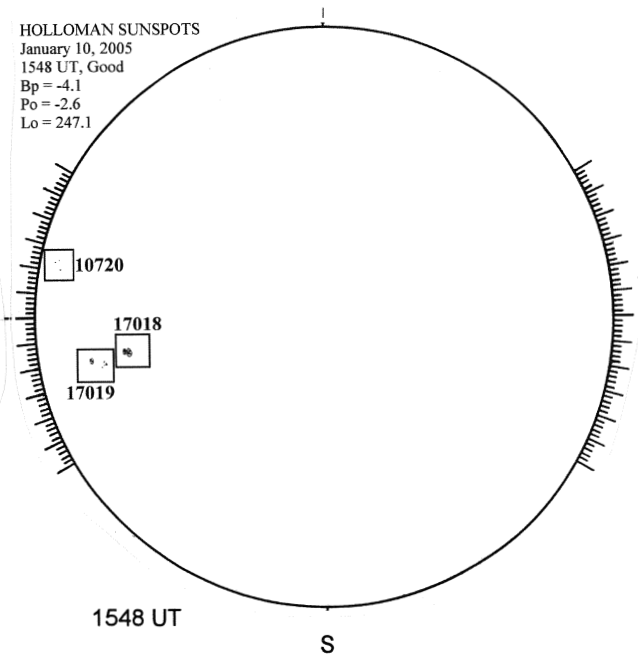

1548 UT
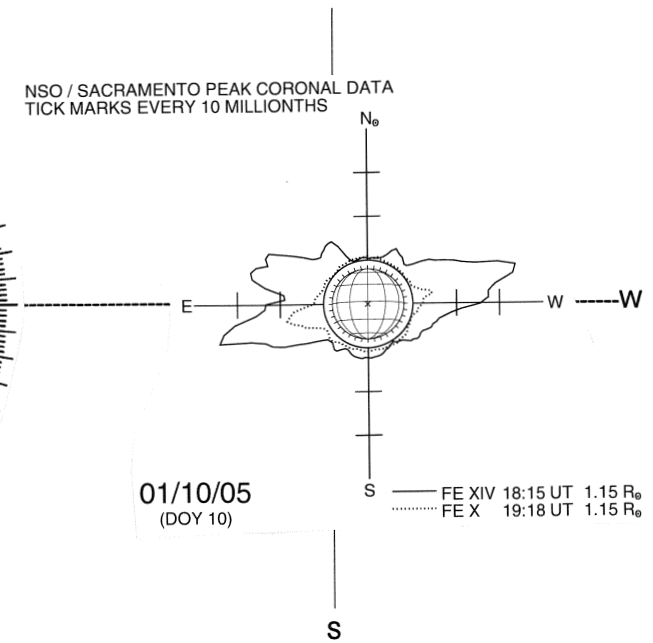
SACRAMENTO PEAK CORONA (1.15 Radii)----