JANUARY 6, 2005 (P= -0.43, Bo = -3.61, Lo = 308.01)

KITT PEAK MAGNETOGRAM--SOLIS

854.2 nm

Bright = +
Dark = -

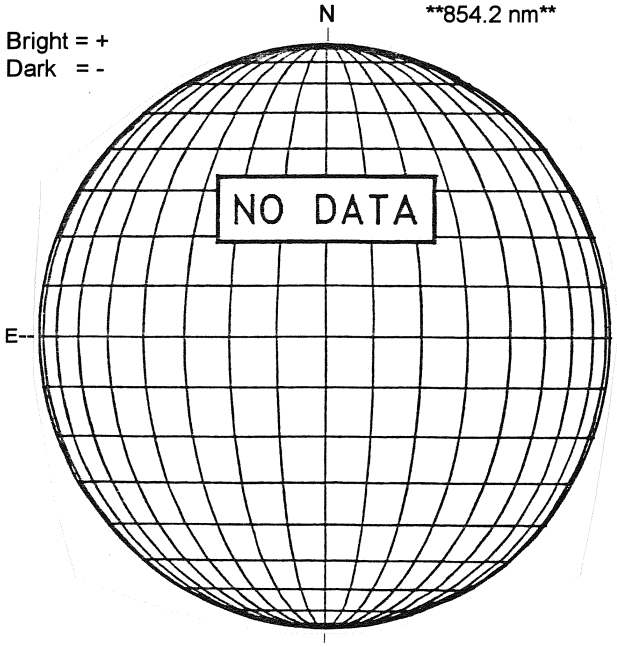

STANFORD MAGNETOGRAM

Solid = +
Dashed = -

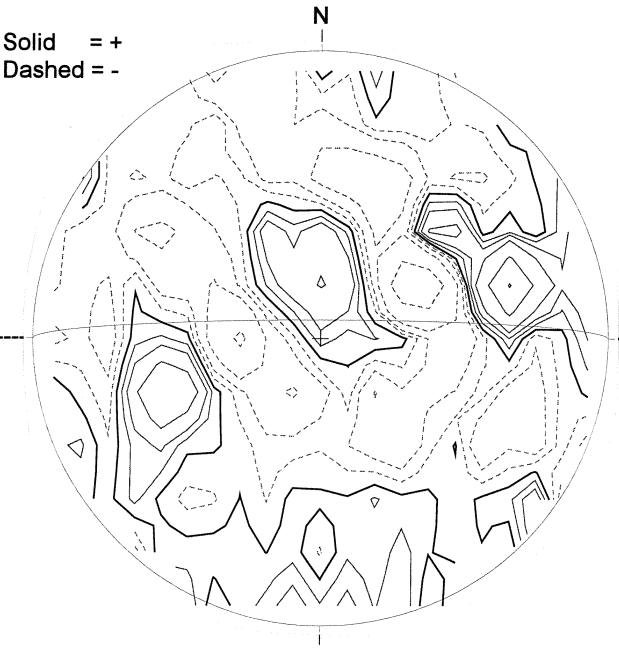

2132 UT

MT. WILSON MAGNETOGRAM

DeltaY =
DeltaX =

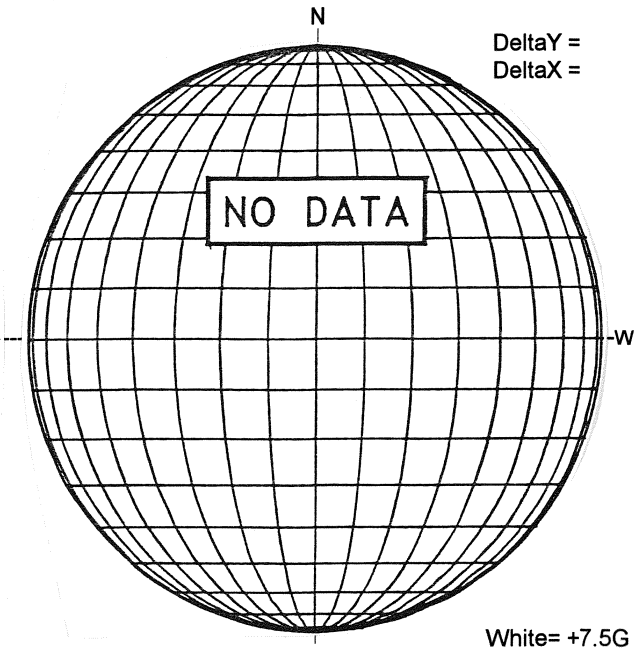

White= +7.5G
Black = -7.5G

KANZELHOEHE H-ALPHA

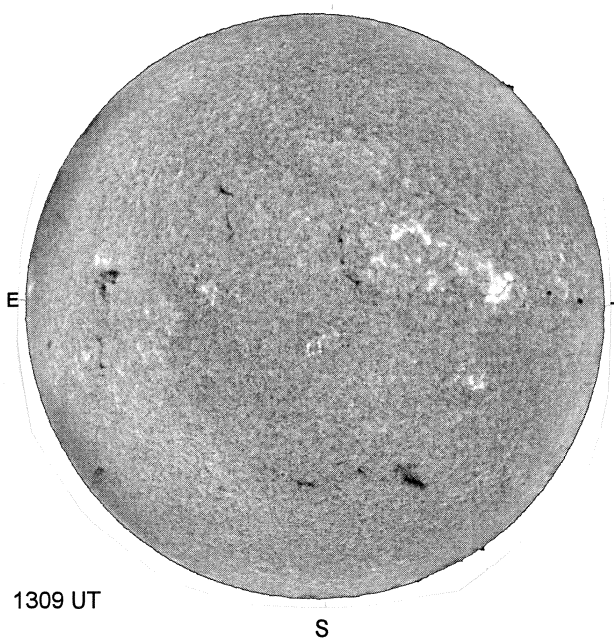

1309 UT

HOLLOMAN SUNSPOTS

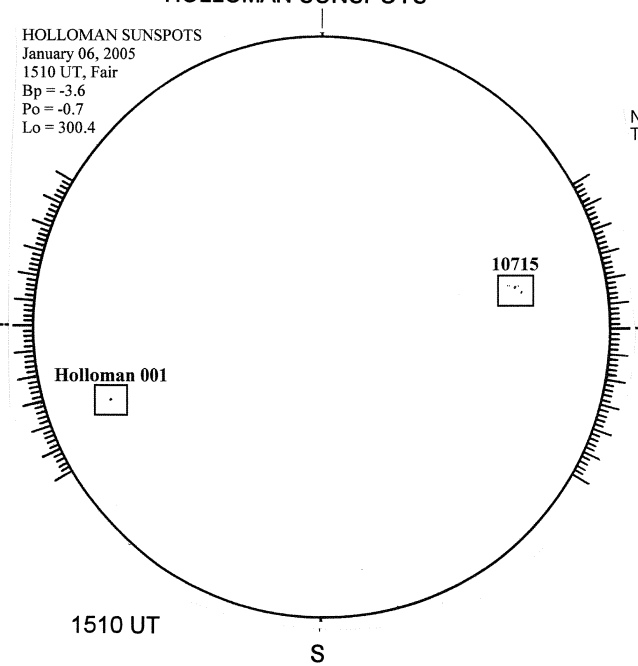

1510 UT

SACRAMENTO PEAK CORONA (1.15 Radii)----

NSO / SACRAMENTO PEAK CORONAL DATA
TICK MARKS EVERY 10 MILLIONTHS

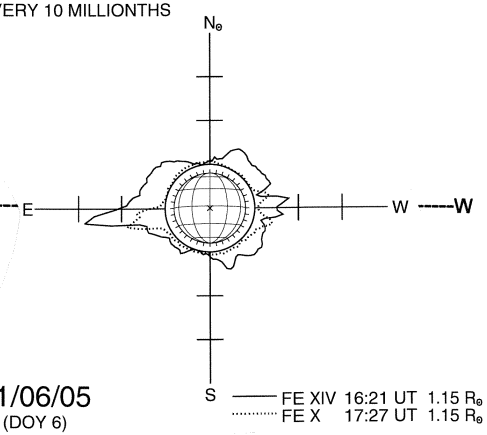

01/06/05
(DOY 6)

FE XIV 16:21 UT 1.15 $R_\odot$
FE X 17:27 UT 1.15 $R_\odot$

S