DECEMBER 20, 2004 (P= 7.75, Bo = -1.58, Lo = 171.91)

KITT PEAK MAGNETOGRAM--SOLIS

N

854.2 nm

Bright = +
Dark = -

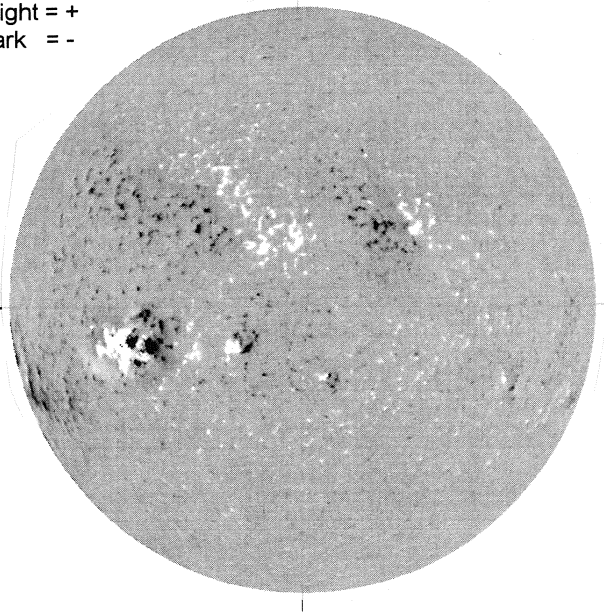

E--

1840 UT

STANFORD MAGNETOGRAM

N

Solid = +
Dashed = -

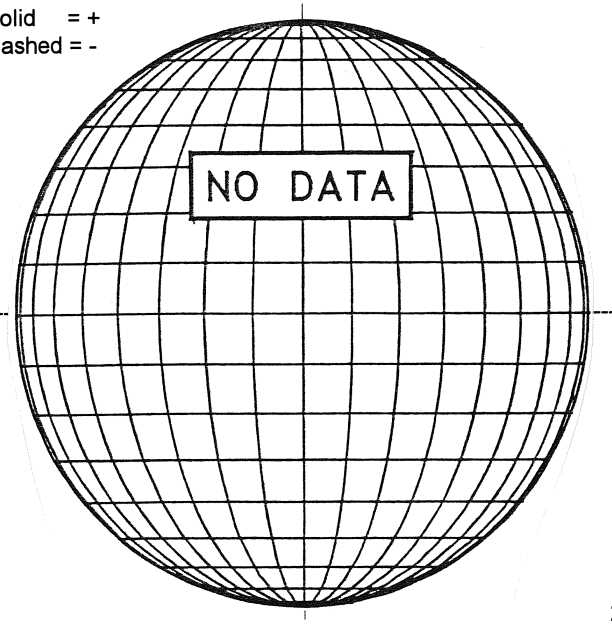

MT. WILSON MAGNETOGRAM

N

DeltaY = 13.1
DeltaX = 9.6

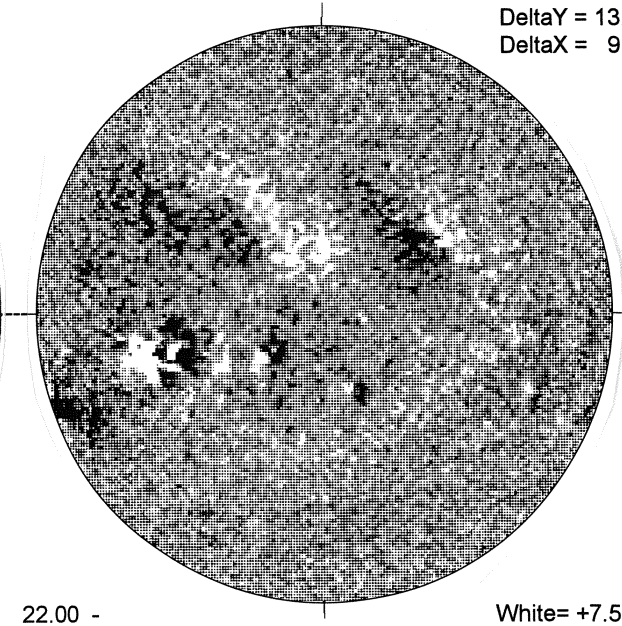

W

22.00 -
22.98 UT

White= +7.5G
Black = -7.5G

---- BIG BEAR H-ALPHA

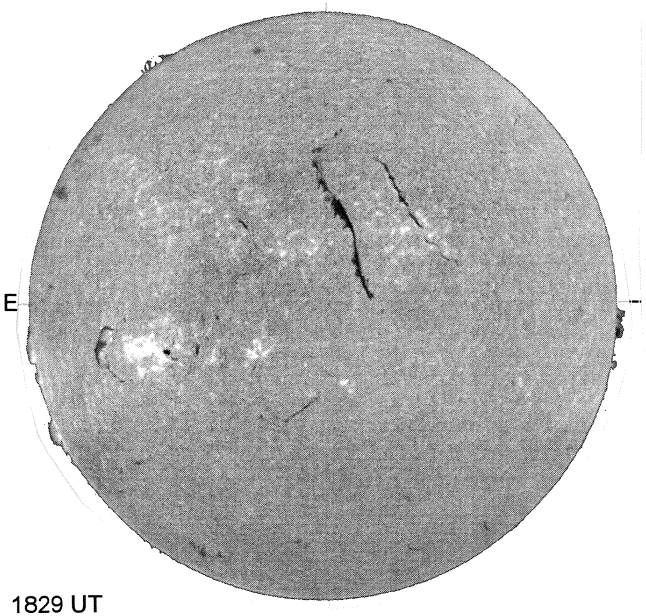

E

1829 UT

S

HOLLOMAN SUNSPOTS

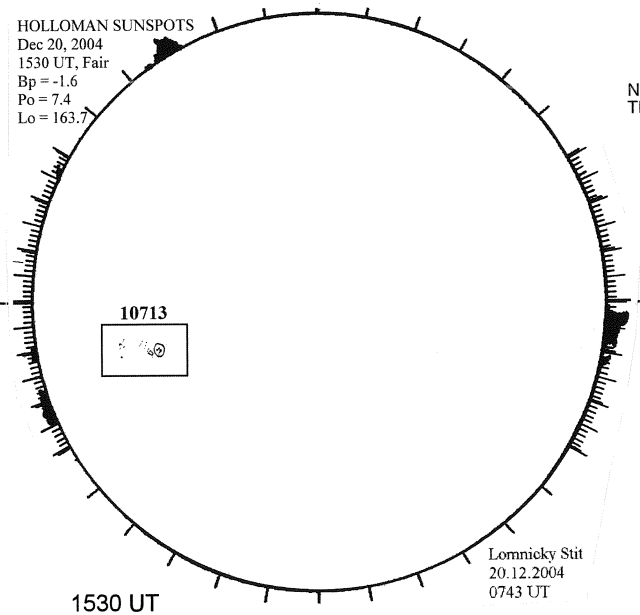

1530 UT
0743 UT LOMN Prom S

SACRAMENTO PEAK CORONA (1.15 Radii)----

NSO / SACRAMENTO PEAK CORONAL DATA
TICK MARKS EVERY 10 MILLIONTHS

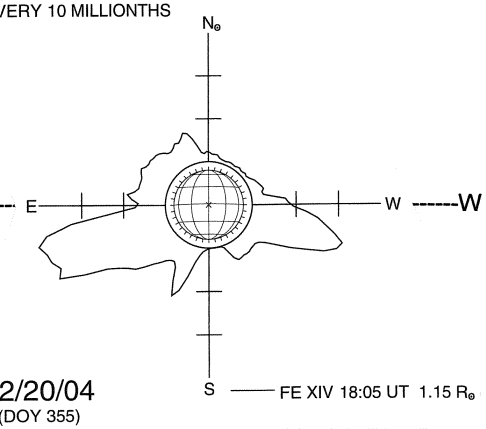

12/20/04
(DOY 355)

S