DECEMBER 3, 2004 (P= 15.20, Bo = 0.59, Lo = 35.90)

KITT PEAK MAGNETOGRAM--SOLIS

854.2 nm

Bright = +
Dark = -

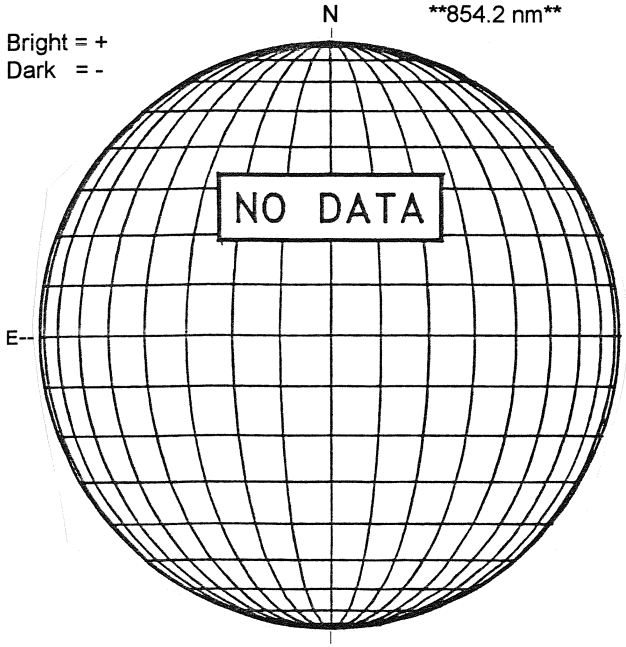

STANFORD MAGNETOGRAM

Solid = +
Dashed = -

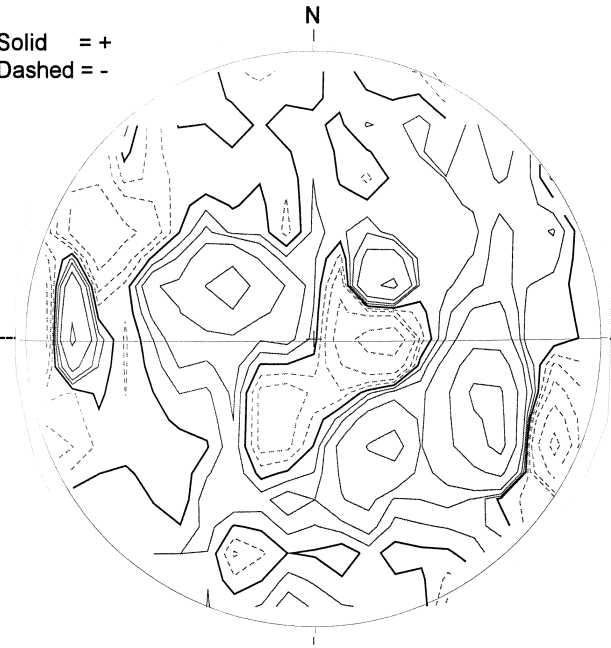

2216 UT

MT. WILSON MAGNETOGRAM

DeltaY = 13.1
DeltaX = 9.6

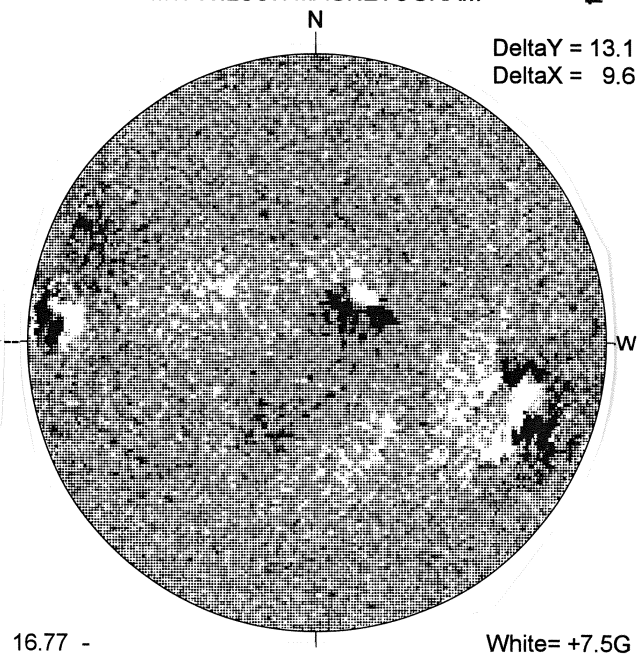

16.77 -
17.74 UT

White= +7.5G
Black = -7.5G

MEUDON H-ALPHA

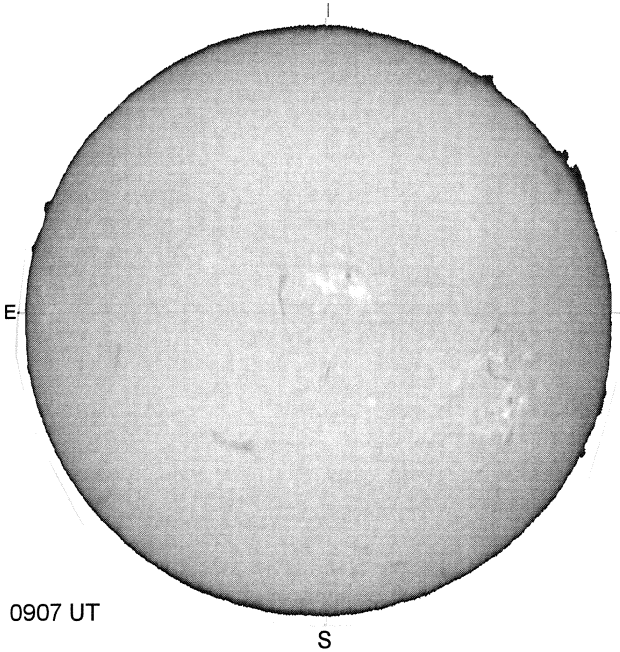

0907 UT

HOLLOMAN SUNSPOTS

HOLLOMAN SUNSPOTS
Dec 03, 2004
1455 UT, Fair
Bp = .5
Po = 14.9
Lo = 28.8

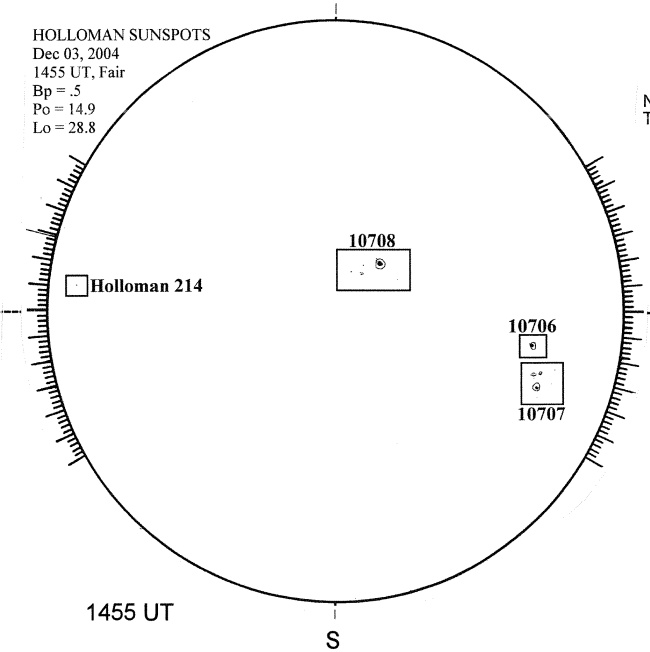

1455 UT

SACRAMENTO PEAK CORONA (1.15 Radii)----

NSO / SACRAMENTO PEAK CORONAL DATA
TICK MARKS EVERY 10 MILLIONTHS

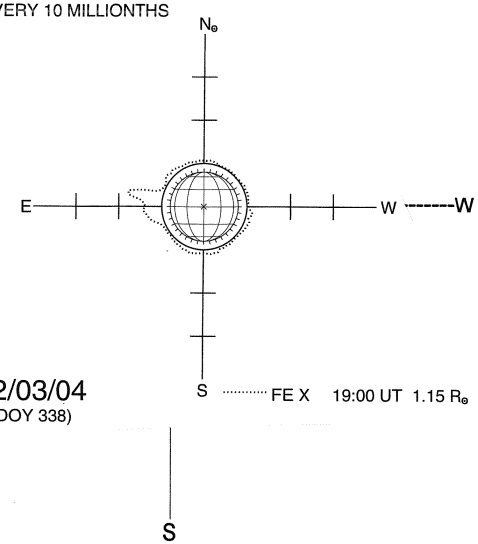

12/03/04
(DOY 338)

FE X 19:00 UT 1.15 R⊙