DECEMBER 1, 2004 (P= 15.98, Bo = 0.84, Lo = 62.26)

KITT PEAK MAGNETOGRAM--SOLIS

854.2 nm

Bright = +
Dark = -

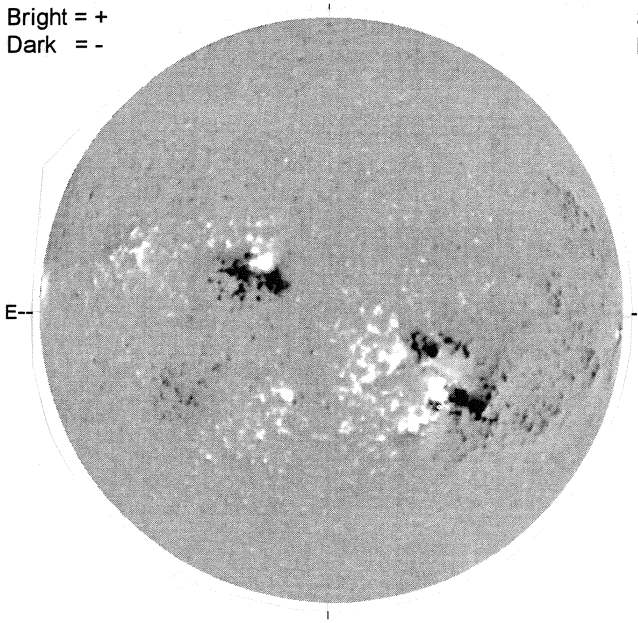

2026 UT

STANFORD MAGNETOGRAM

Solid = +
Dashed = -

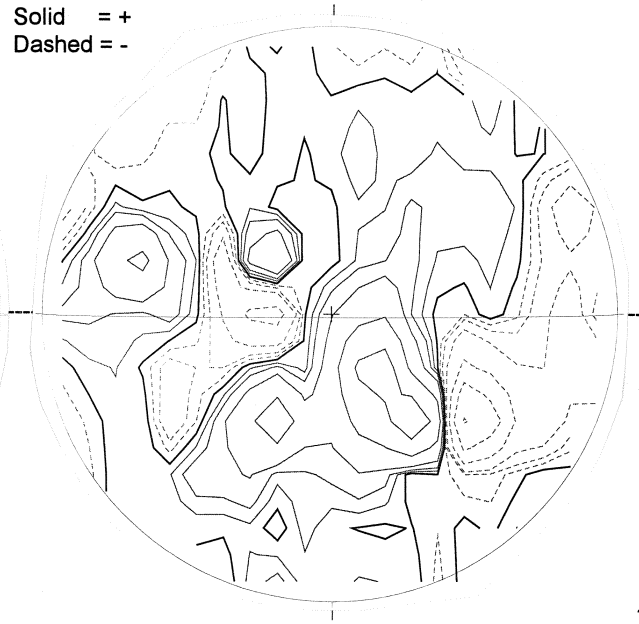

2059 UT

MT. WILSON MAGNETOGRAM

DeltaY = 13.1
DeltaX = 9.6

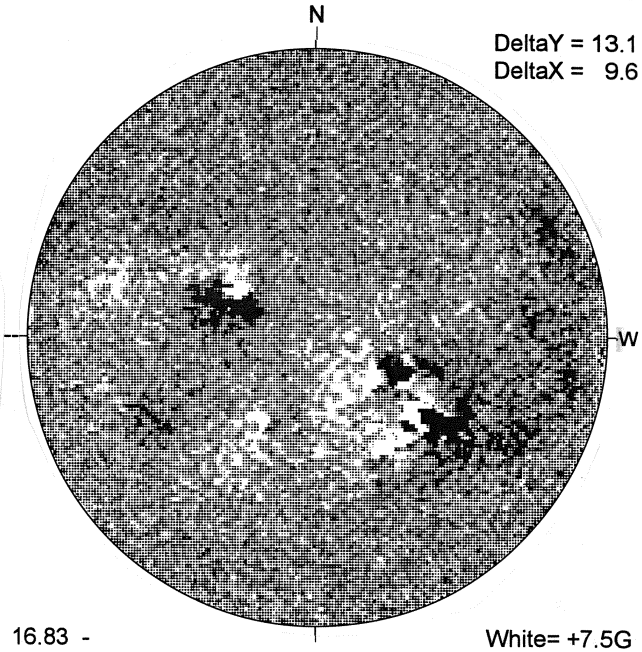

16.83 -
17.79 UT

White= +7.5G
Black = -7.5G

BIG BEAR H-ALPHA

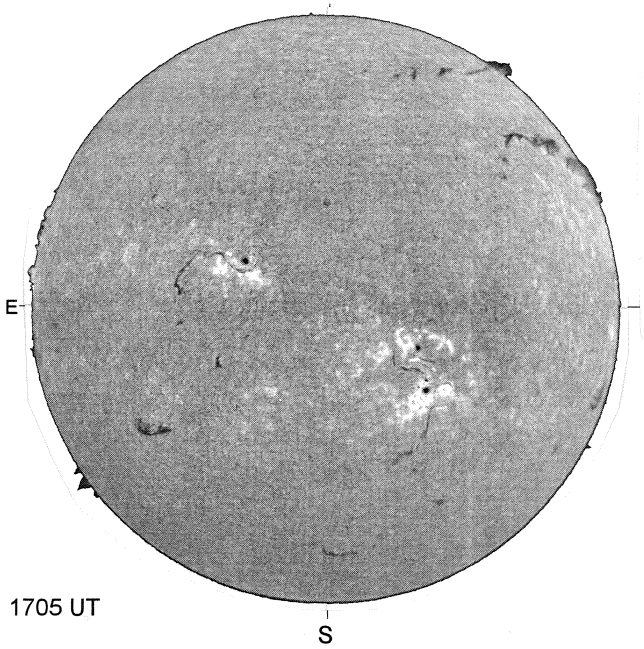

1705 UT

HOLLOMAN SUNSPOTS

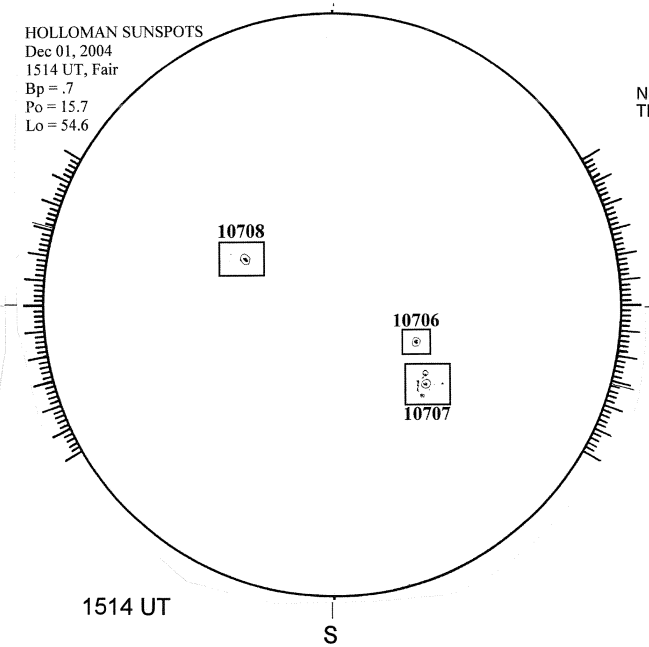

1514 UT

SACRAMENTO PEAK CORONA (1.15 Radii)----

NSO / SACRAMENTO PEAK CORONAL DATA
TICK MARKS EVERY 10 MILLIONTHS

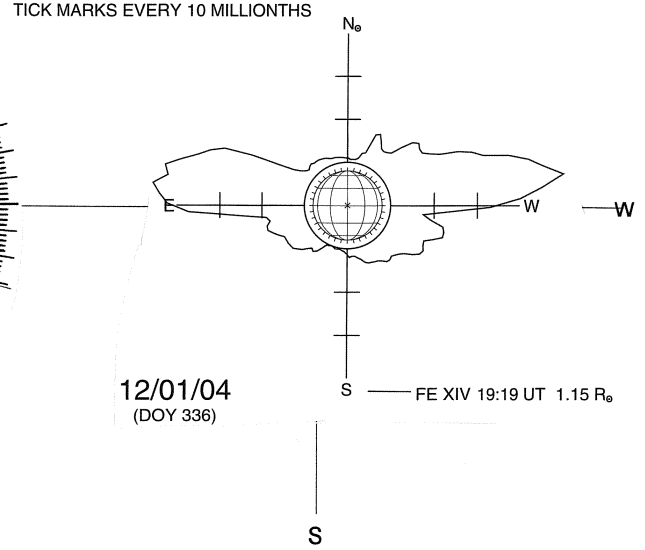

12/01/04
(DOY 336)

FE XIV 19:19 UT 1.15 R⊙