NOVEMBER 29, 2004 (P= 16.74, Bo = 1.10, Lo = 88.62)

KITT PEAK MAGNETOGRAM--SOLIS

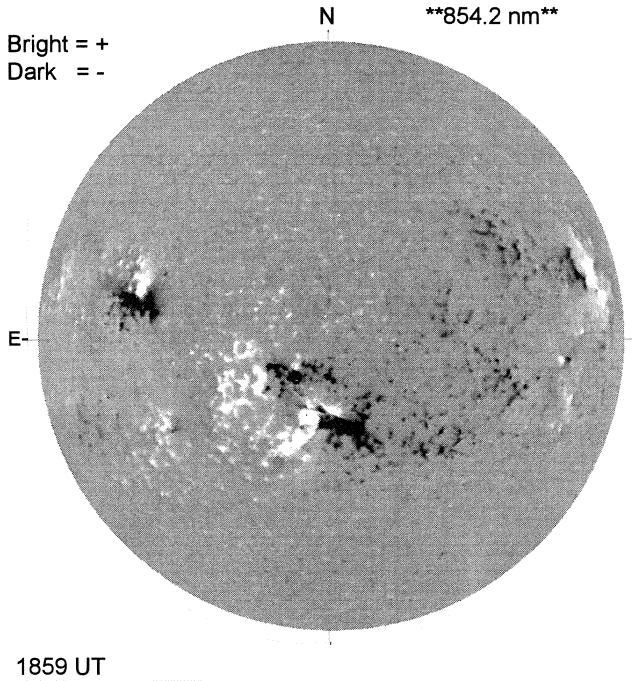

STANFORD MAGNETOGRAM

MT. WILSON MAGNETOGRAM

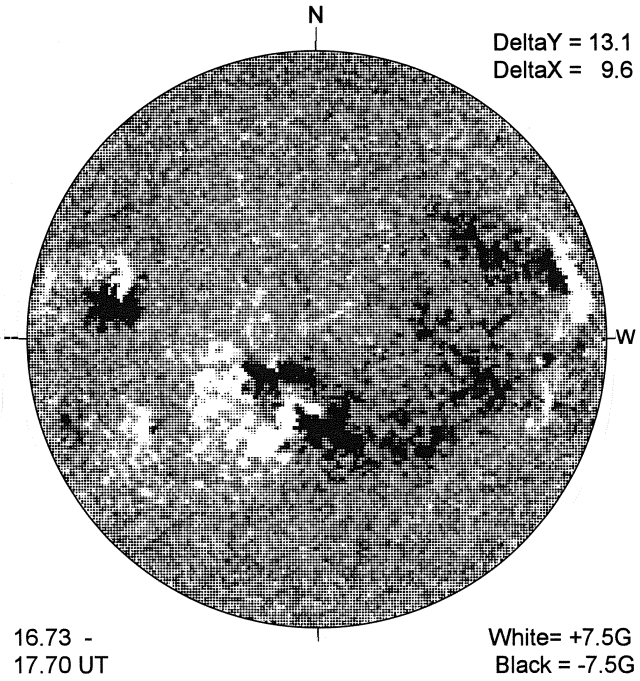

MEUDON H-ALPHA

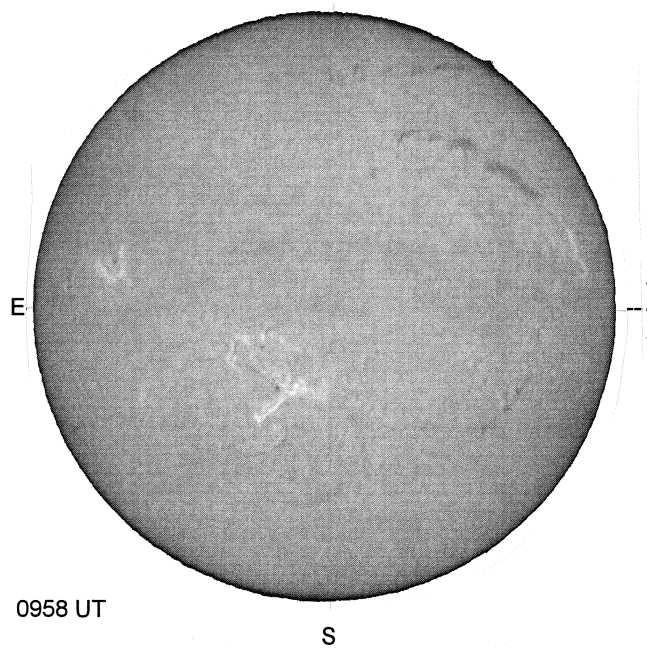

HOLLOMAN SUNSPOTS

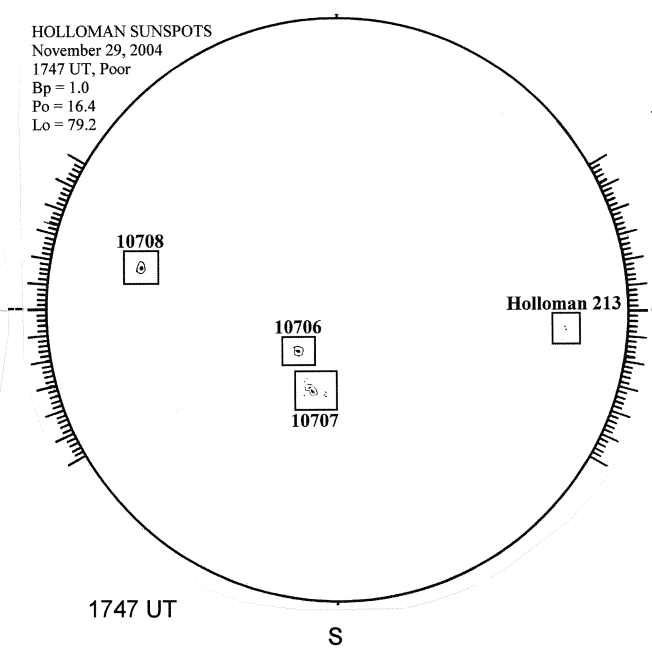
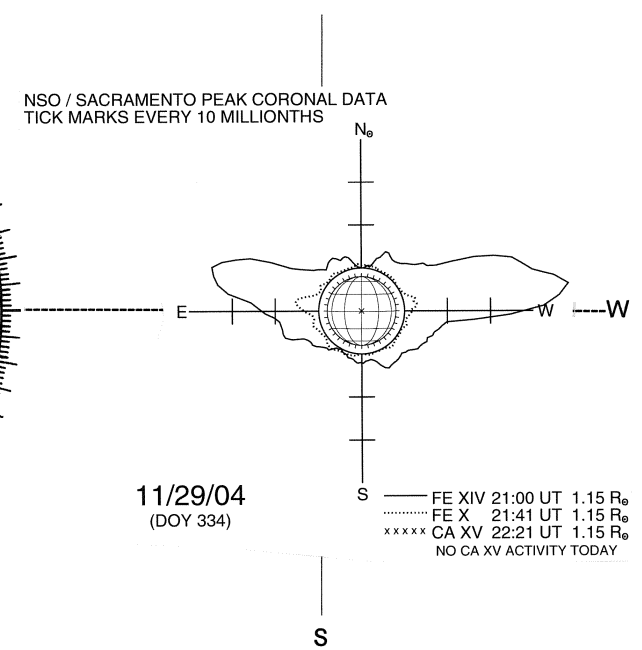
SACRAMENTO PEAK CORONA (1.15 Radii)----