NOVEMBER 11, 2004 (P= 22.37, Bo = 3.27, Lo = 325.88)

KITT PEAK MAGNETOGRAM--SOLIS

854.2 nm

Bright = +
Dark = -

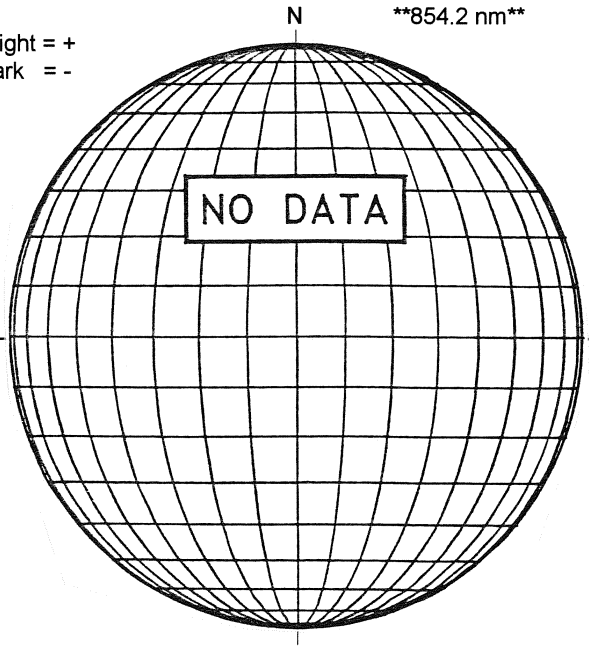

STANFORD MAGNETOGRAM

Solid = +
Dashed = -

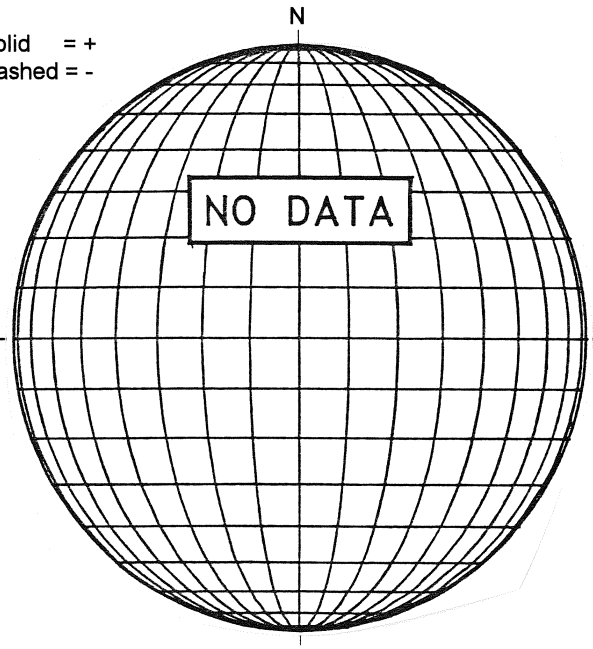

MT. WILSON MAGNETOGRAM

DeltaY =
DeltaX =

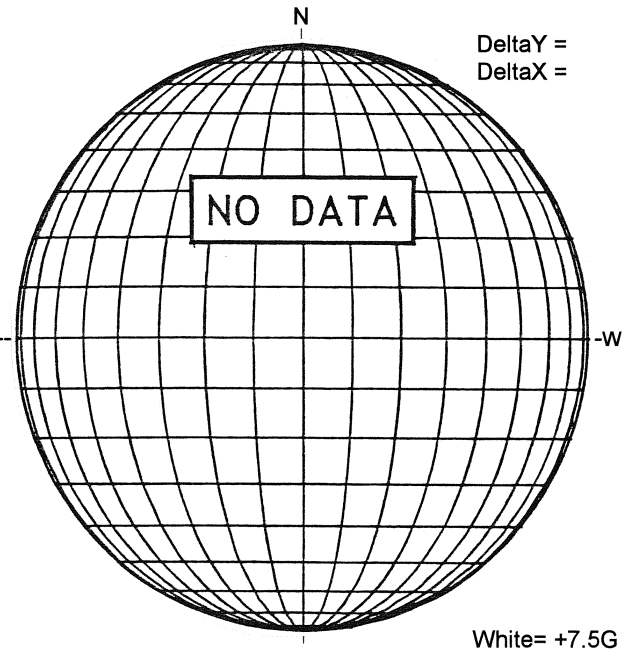

White= +7.5G
Black = -7.5G

BIG BEAR H-ALPHA

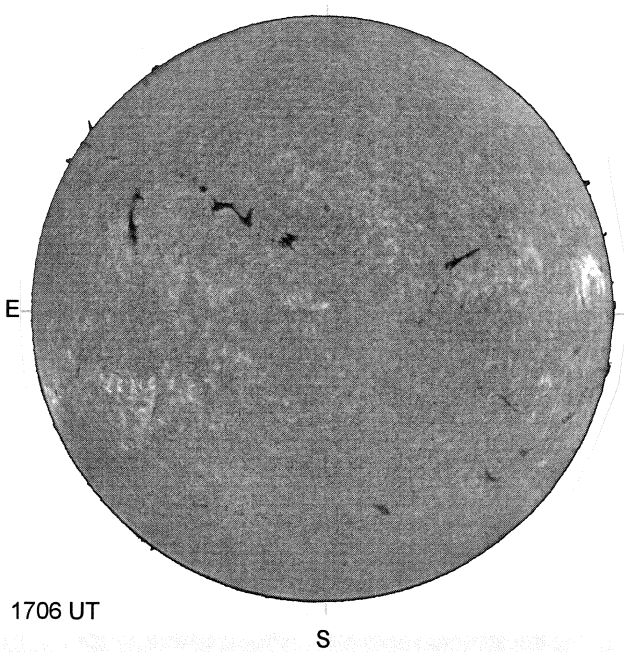

1706 UT

HOLLOMAN SUNSPOTS

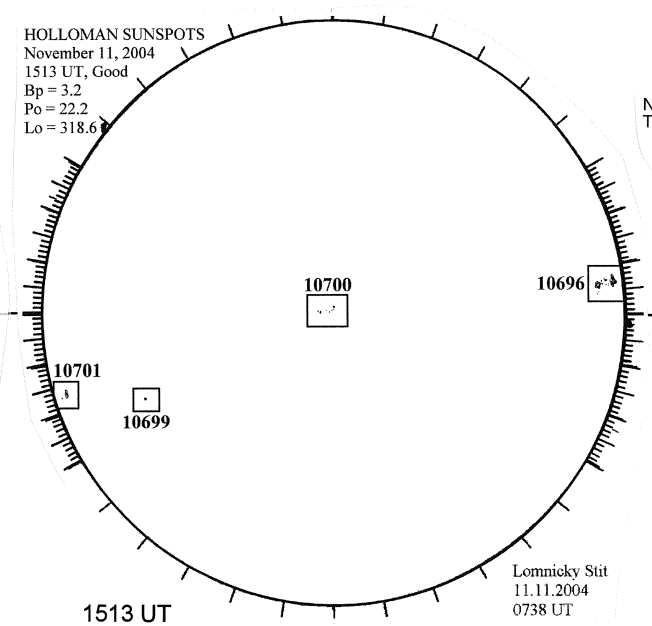

1513 UT
0738 UT LOMN Prom S

SACRAMENTO PEAK CORONA (1.15 Radii)----

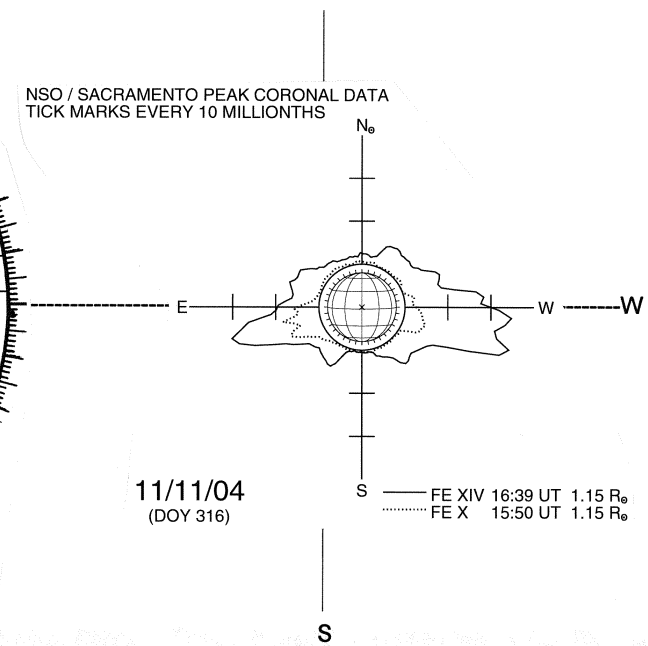

11/11/04
(DOY 316)