NOVEMBER 8, 2004 (P= 23.08, Bo = 3.61, Lo = 5.43)

KITT PEAK MAGNETOGRAM--SOLIS

854.2 nm

Bright = +
Dark = -

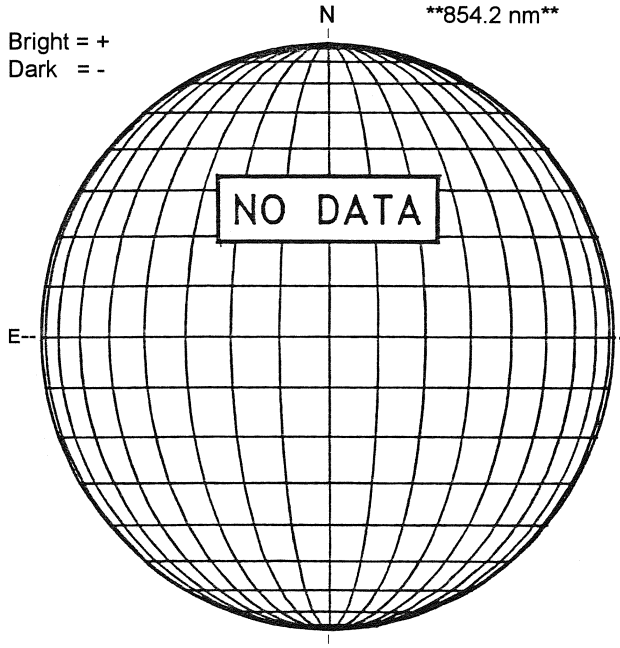

STANFORD MAGNETOGRAM

Solid = +
Dashed = -

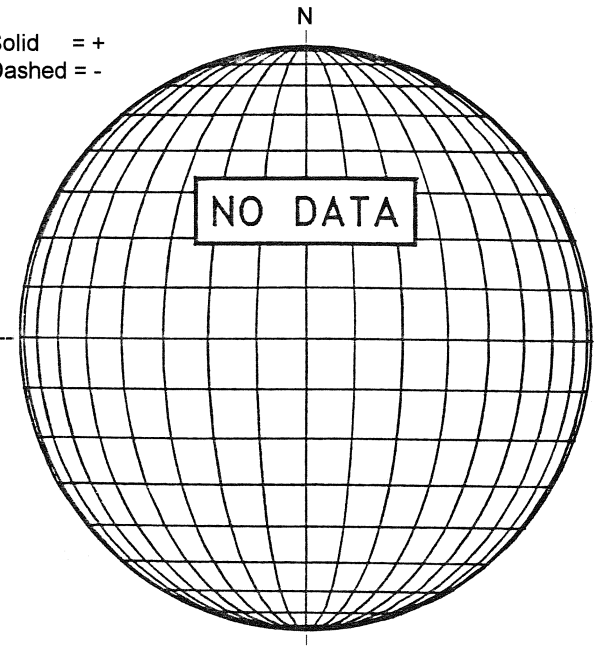

MT. WILSON MAGNETOGRAM

DeltaY =
DeltaX =

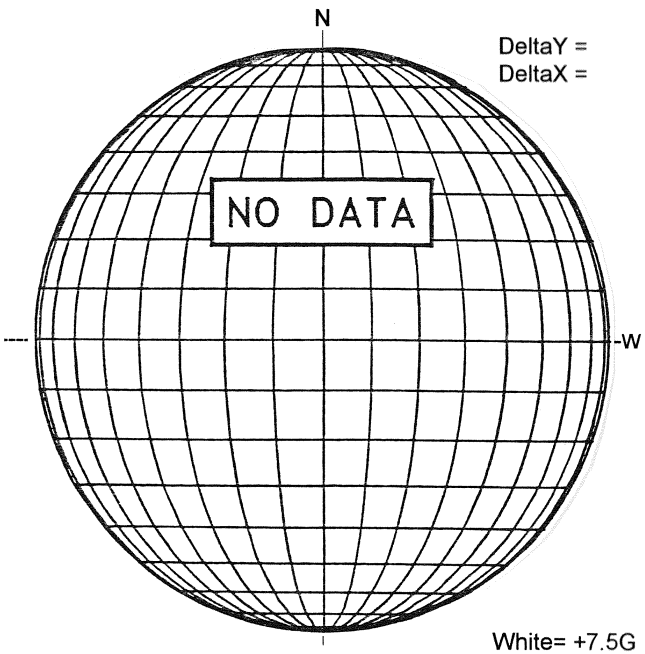

White= +7.5G
Black = -7.5G

KANZELHOHE H-ALPHA

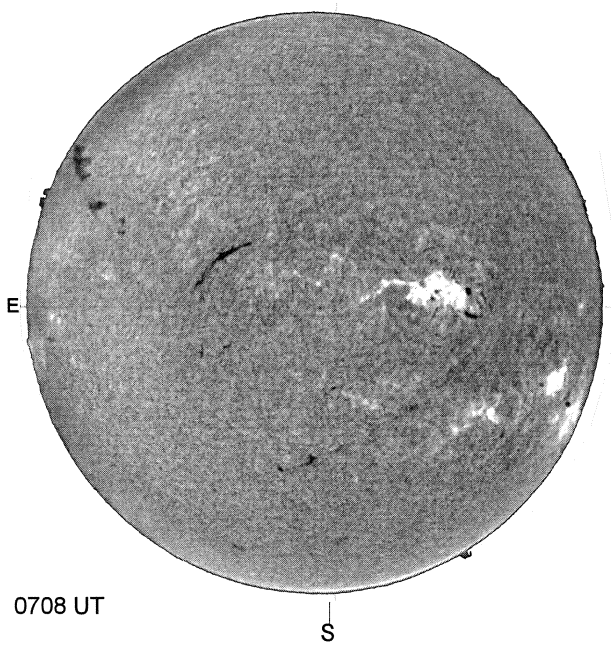

0708 UT

HOLLOMAN SUNSPOTS

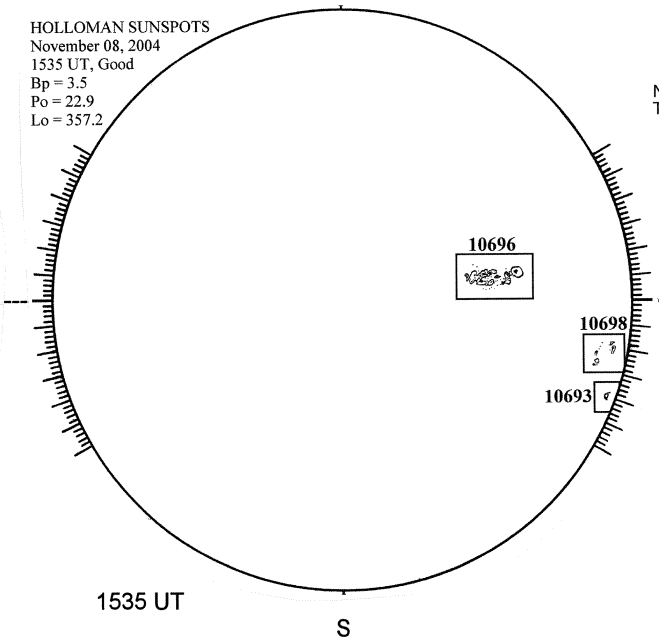

1535 UT
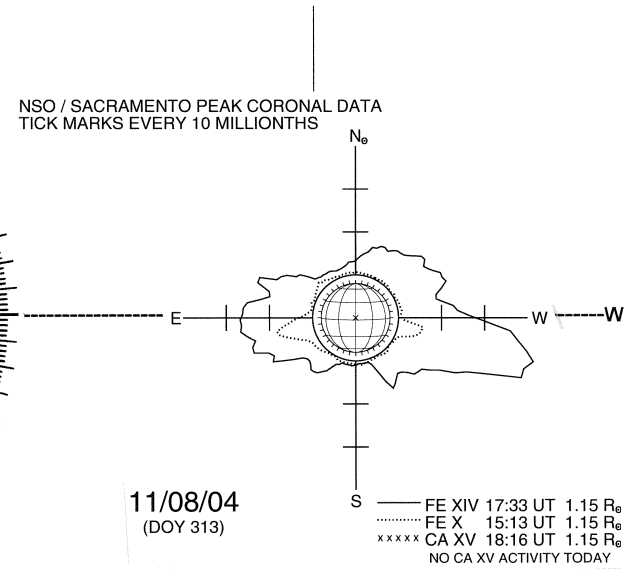
SACRAMENTO PEAK CORONA (1.15 Radii)