NOVEMBER 4, 2004 (P= 23.91, Bo = 4.04, Lo = 58.17)

KITT PEAK MAGNETOGRAM--SOLIS

N **854.2 nm**

Bright = +
Dark = -

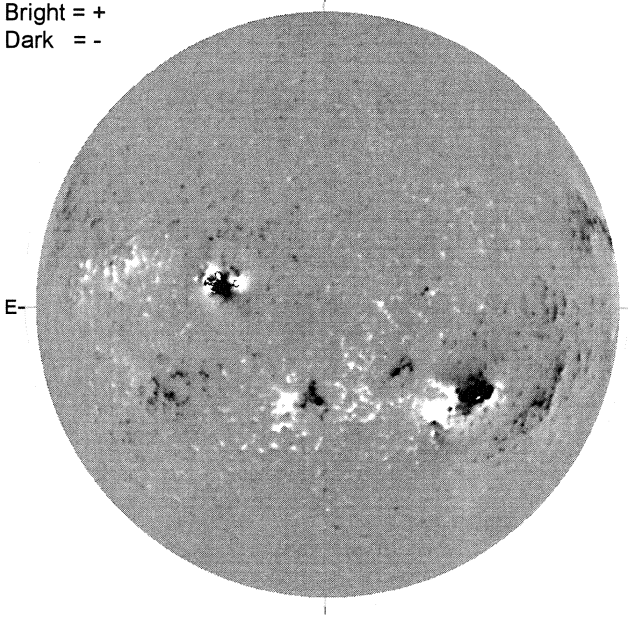

E-

1720 UT

STANFORD MAGNETOGRAM

N

Solid = +
Dashed = -

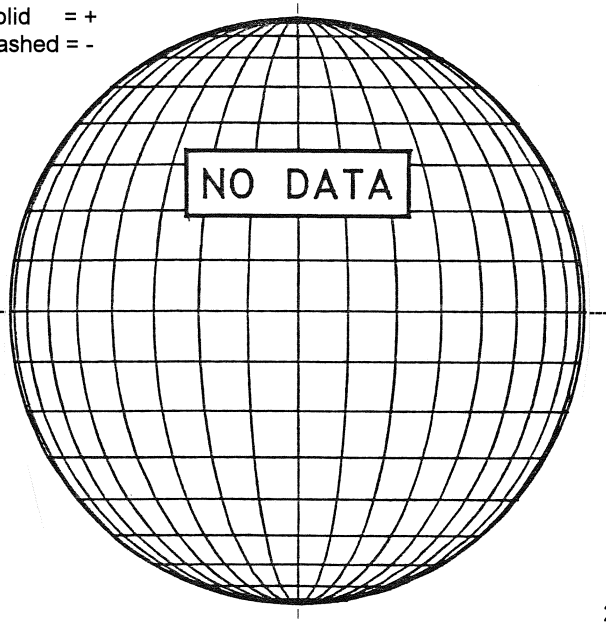

MT. WILSON MAGNETOGRAM

N

DeltaY = 13.1
DeltaX = 9.6

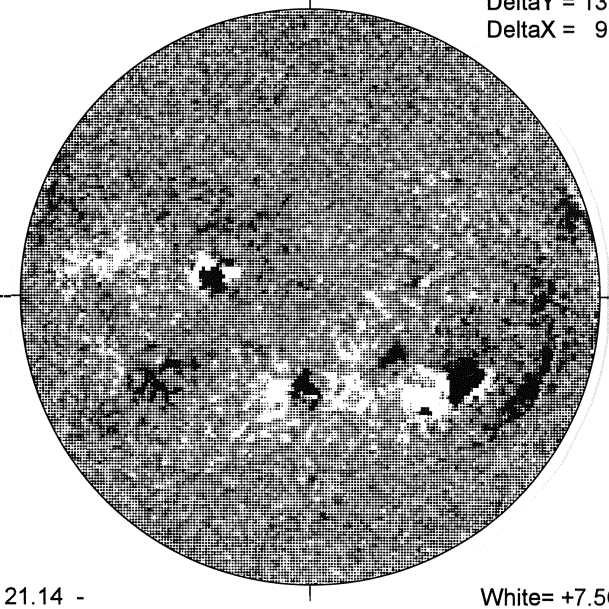

-W

21.14 -
22.10 UT

White= +7.5G
Black = -7.5G

----- BIG BEAR H-ALPHA

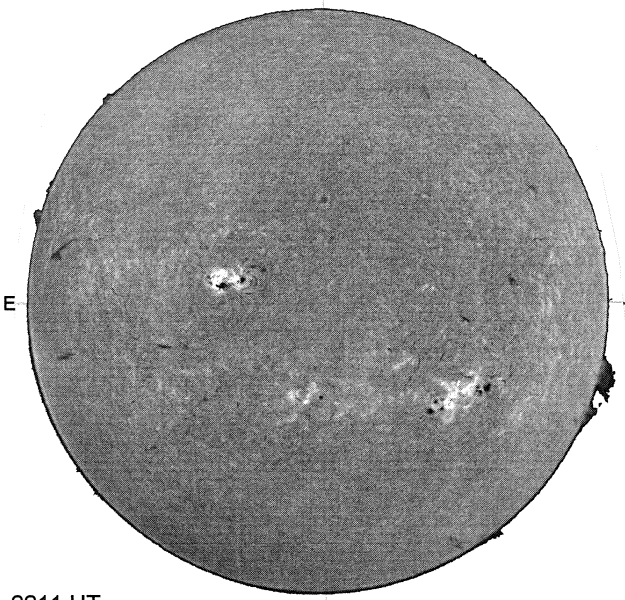

E

2211 UT

S

HOLLOMAN SUNSPOTS

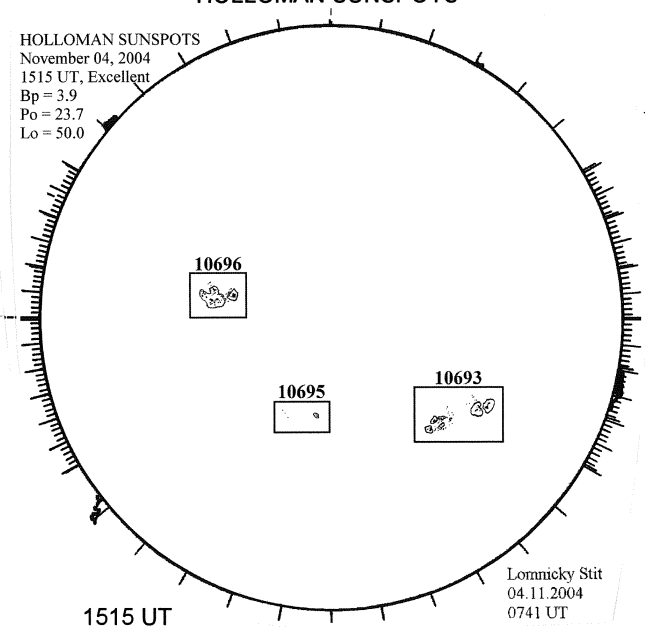

1515 UT
0741 UT LOMN Prom S

SACRAMENTO PEAK CORONA (1.15 Radii)----

NSO / SACRAMENTO PEAK CORONAL DATA
TICK MARKS EVERY 10 MILLIONTHS

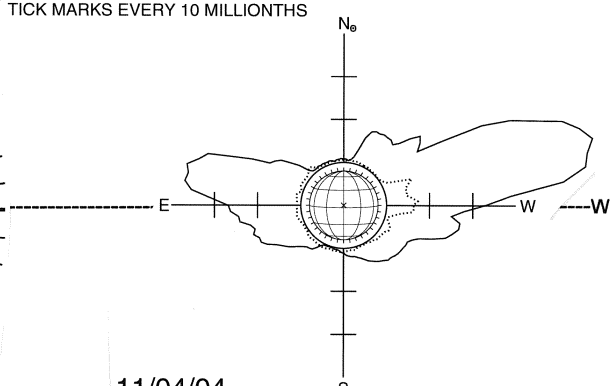

11/04/04
(DOY 309)

FE XIV 16:52 UT 1.15 R⊙
FE X 18:06 UT 1.15 R⊙
xxxxx CA XV 18:48 UT 1.15 R⊙
NO CA XV ACTIVITY TODAY

S