OCTOBER 29, 2004 (P= 24.92, Bo = 4.65, Lo = 137.29)

KITT PEAK MAGNETOGRAM--SOLIS

854.2 nm

Bright = +
Dark = -

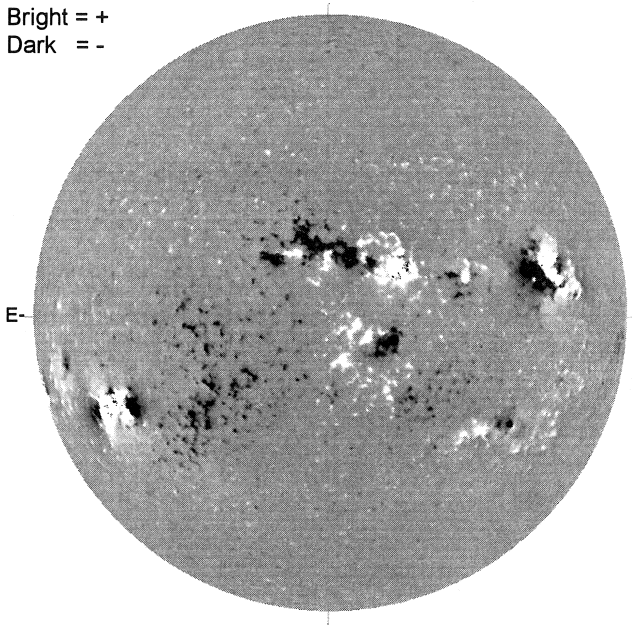

1920 UT

STANFORD MAGNETOGRAM

Solid = +
Dashed = -

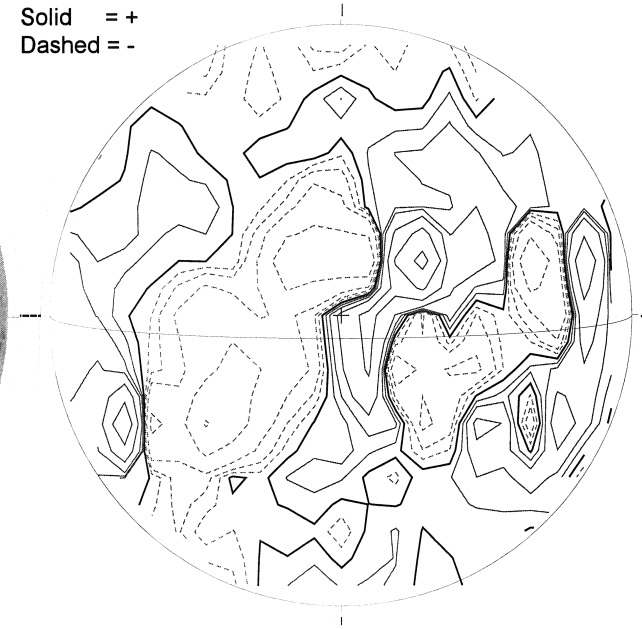

2120 UT

MT. WILSON MAGNETOGRAM

DeltaY =
DeltaX =

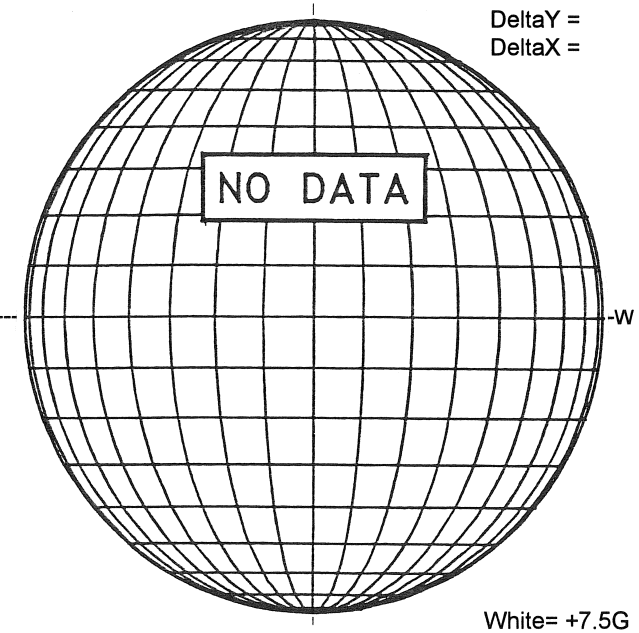

White= +7.5G
Black = -7.5G

KANZELHOHE H-ALPHA

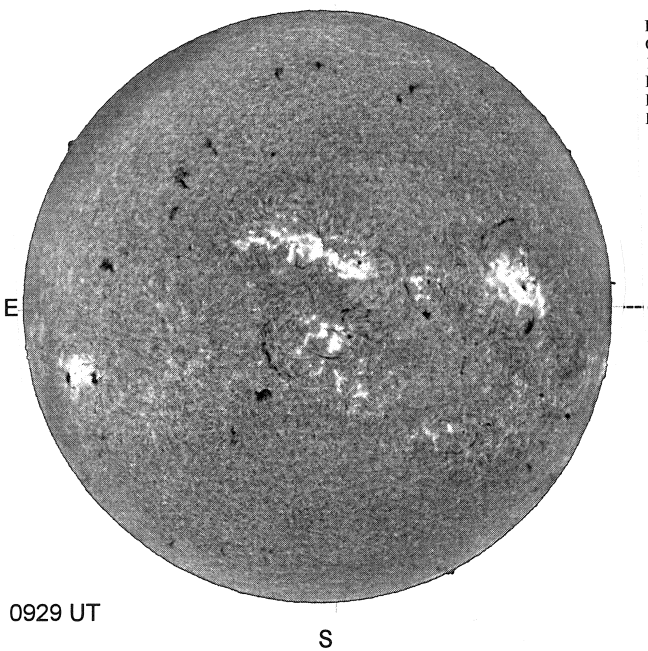

0929 UT

HOLLOMAN SUNSPOTS

HOLLOMAN SUNSPOTS
October 29, 2004
1551 UT, Fair
Bp = 4.5
Po = 24.8
Lo = 129.6

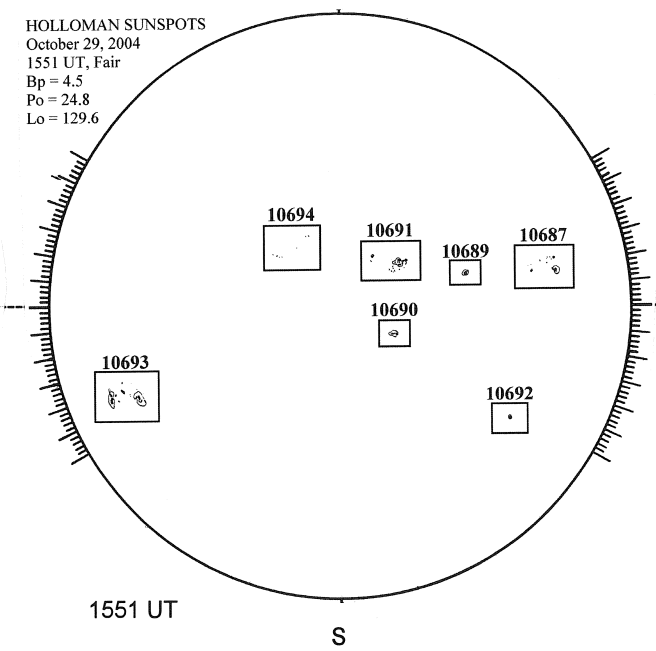

1551 UT

SACRAMENTO PEAK CORONA (1.15 Radii)----

NSO / SACRAMENTO PEAK CORONAL DATA
TICK MARKS EVERY 10 MILLIONTHS

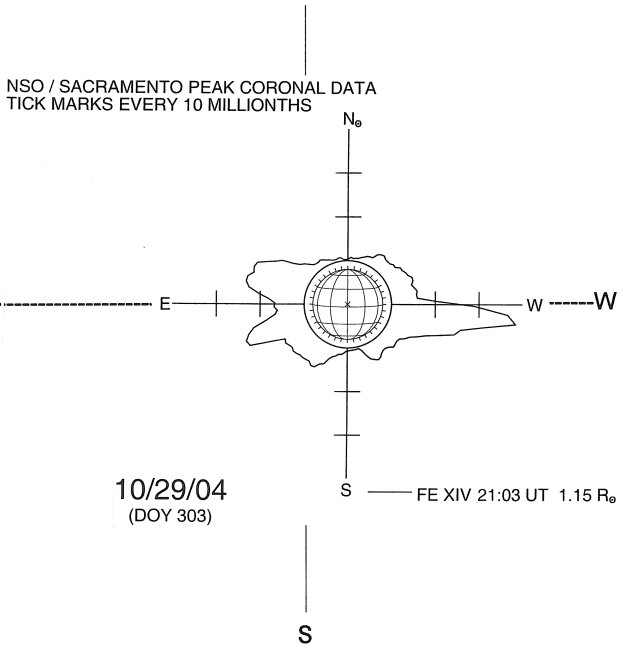

10/29/04
(DOY 303)

FE XIV 21:03 UT 1.15 R☉