OCTOBER 26, 2004 (P= 25.32, Bo = 4.93, Lo = 176.86)

KITT PEAK MAGNETOGRAM--SOLIS

854.2 nm

Bright = +
Dark = -

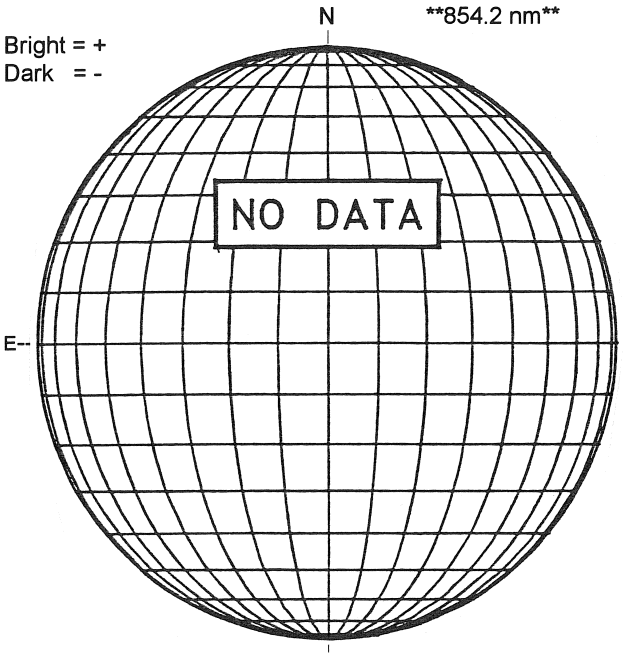

STANFORD MAGNETOGRAM

Solid = +
Dashed = -

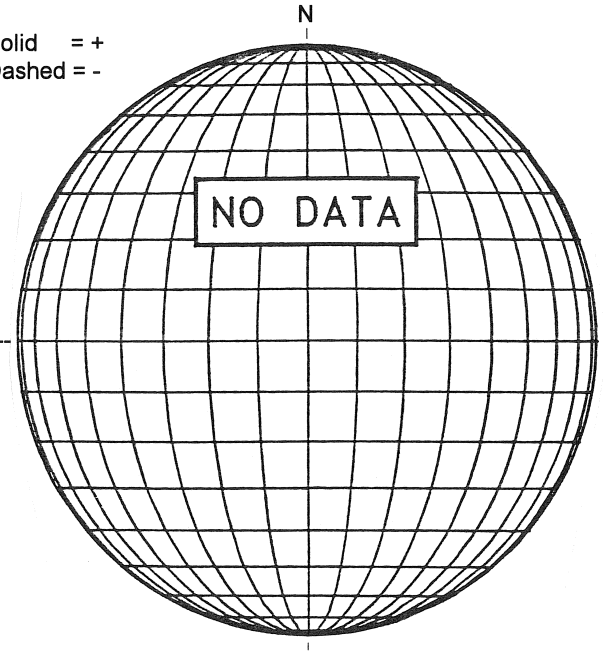

MT. WILSON MAGNETOGRAM

DeltaY =
DeltaX =

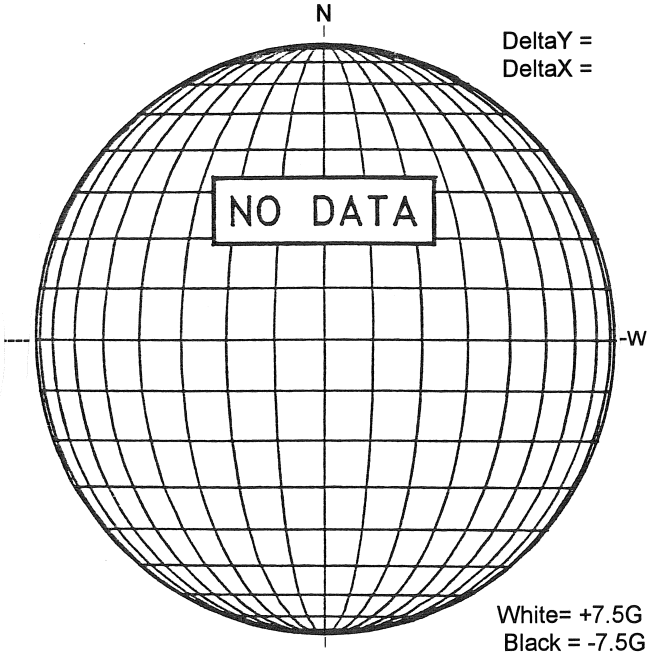

White= +7.5G
Black = -7.5G

KANZELHOHE H-ALPHA

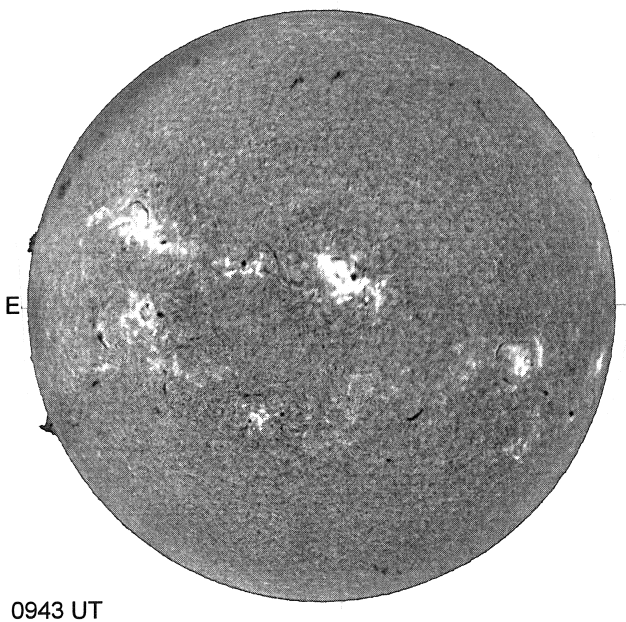

0943 UT

S

HOLLOMAN SUNSPOTS

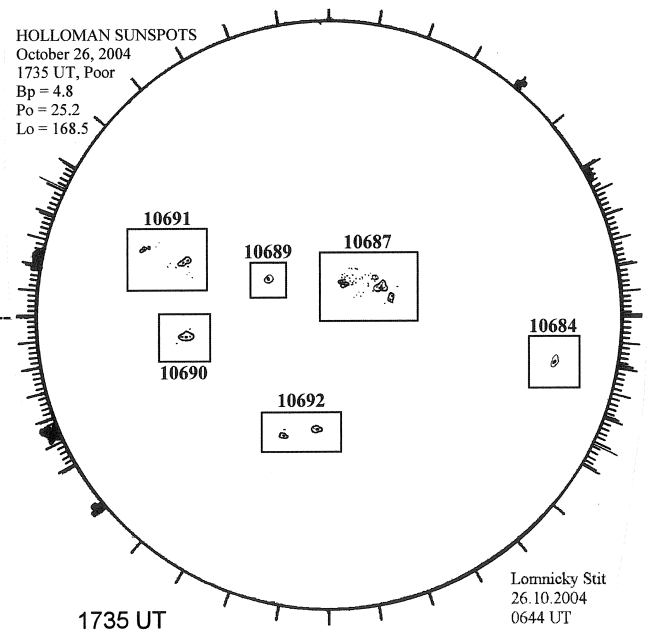

1735 UT
0644 UT LOMN Prom S

LOMNICKY PEAK CORONA (1.04 Radii)----

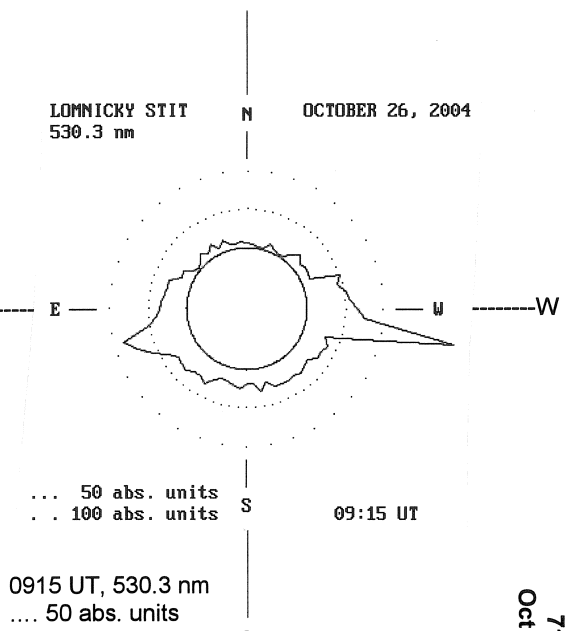

0915 UT, 530.3 nm
.... 50 abs. units
. . 100 abs. units S

71
Oct 04