OCTOBER 20, 2004 (P= 25.92, Bo = 5.46, Lo = 255.99)

KITT PEAK MAGNETOGRAM--SOLIS

N **854.2 nm**

Bright = +
Dark = -

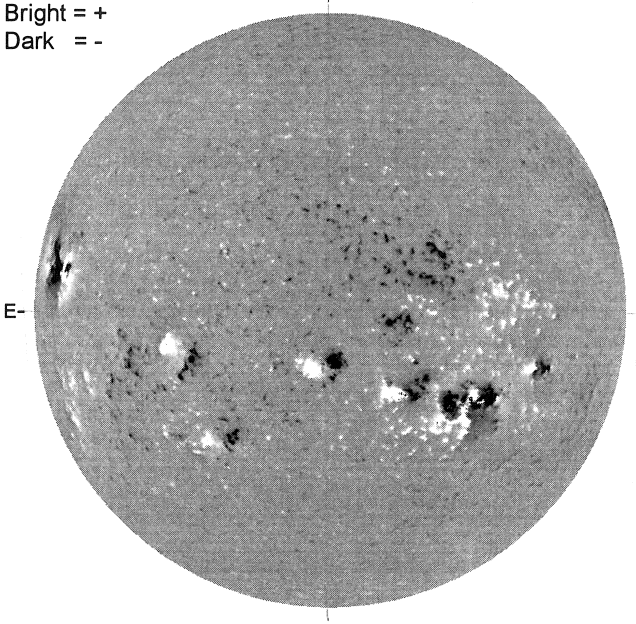

E-

1722 UT

STANFORD MAGNETOGRAM

N

Solid = +
Dashed = -

1838 UT

MT. WILSON MAGNETOGRAM

N

DeltaY =
DeltaX =

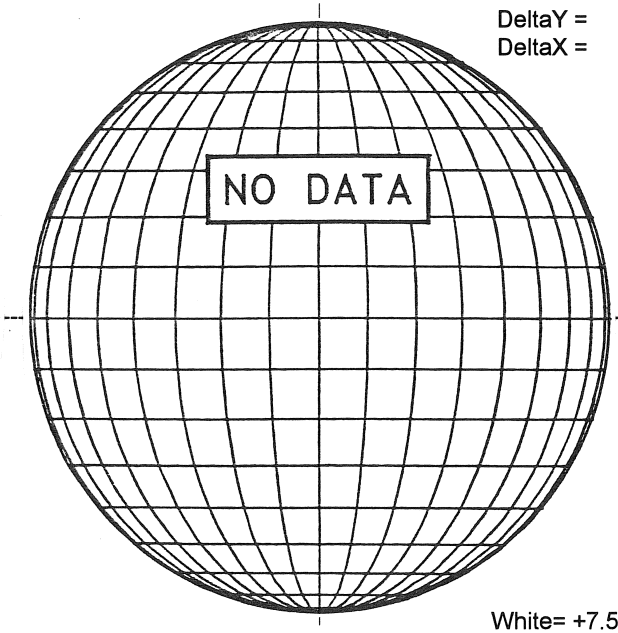

-W

White= +7.5G
Black = -7.5G

KANZELHOHE H-ALPHA

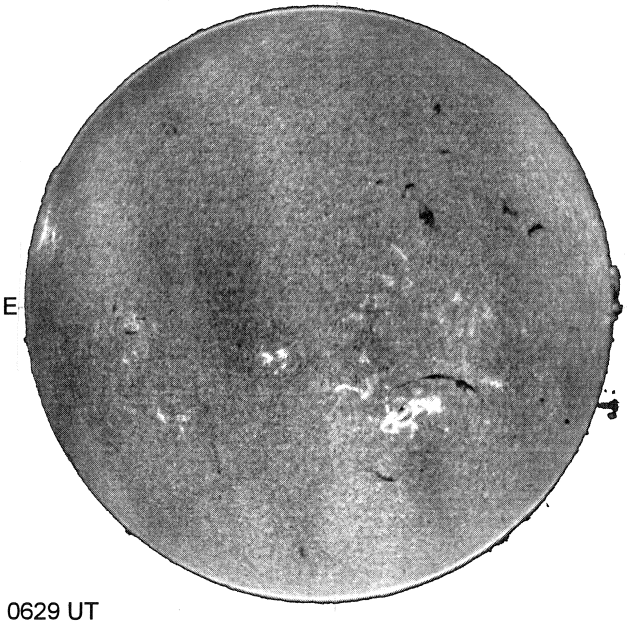

E

0629 UT

S

HOLLOMAN SUNSPOTS

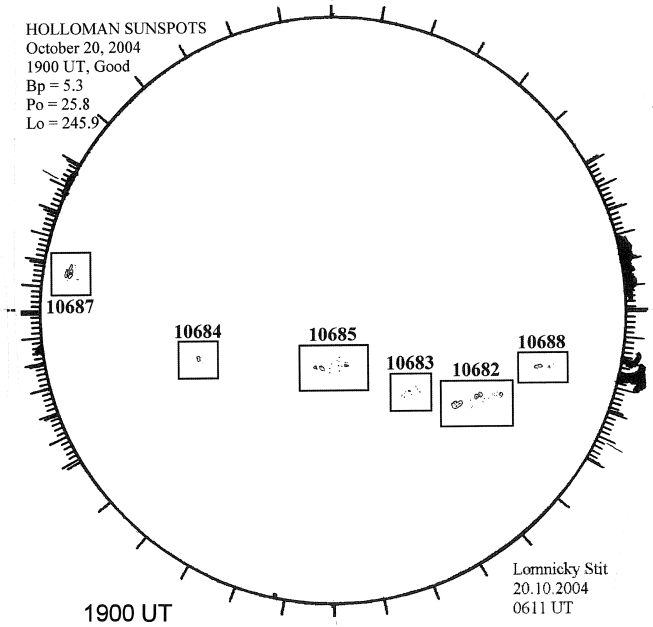

1900 UT
0611 UT LOMN Prom S

SACRAMENTO PEAK CORONA (1.15 Radii)----

NSO / SACRAMENTO PEAK CORONAL DATA
TICK MARKS EVERY 10 MILLIONTHS

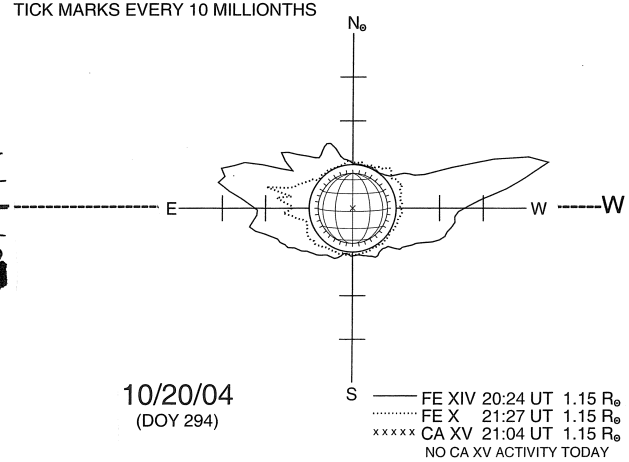

10/20/04
(DOY 294)

S