OCTOBER 15, 2004 (P= 26.20, Bo = 5.85, Lo = 321.94)

KITT PEAK MAGNETOGRAM--SOLIS

854.2 nm

Bright = +
Dark = -

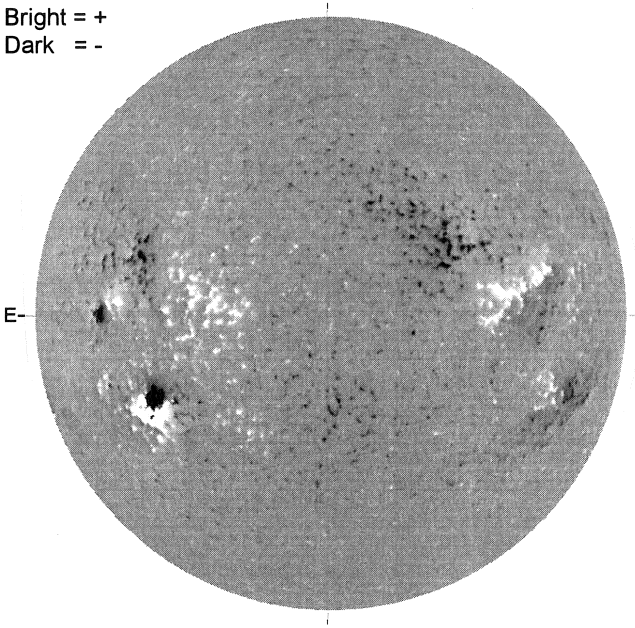

2000 UT

STANFORD MAGNETOGRAM

Solid = +
Dashed = -

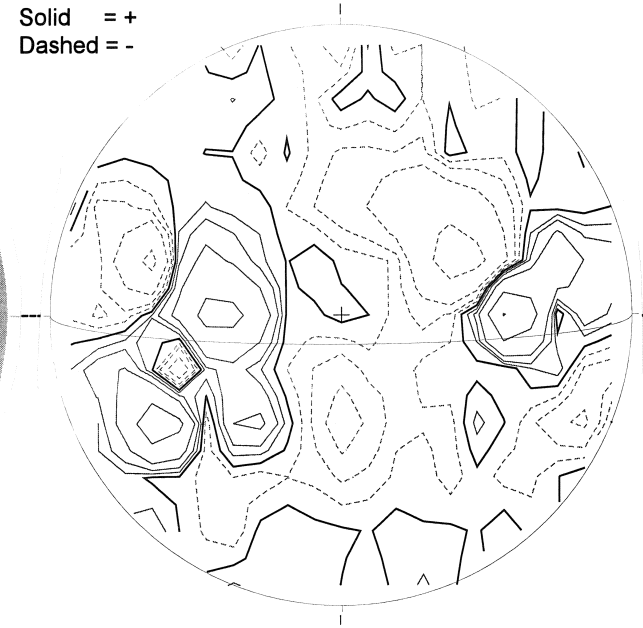

2107 UT

MT. WILSON MAGNETOGRAM

DeltaY = 20.1
DeltaX = 12.9

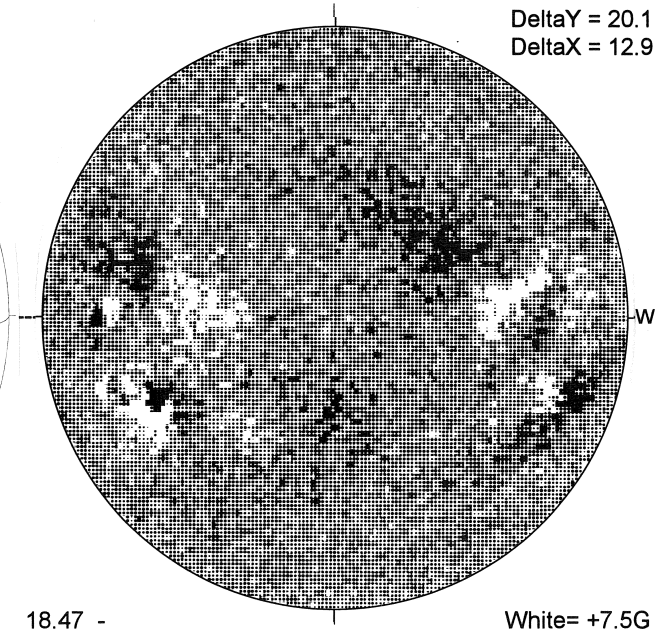

18.47 -
18.89 UT

White= +7.5G
Black = -7.5G

BIG BEAR H-ALPHA

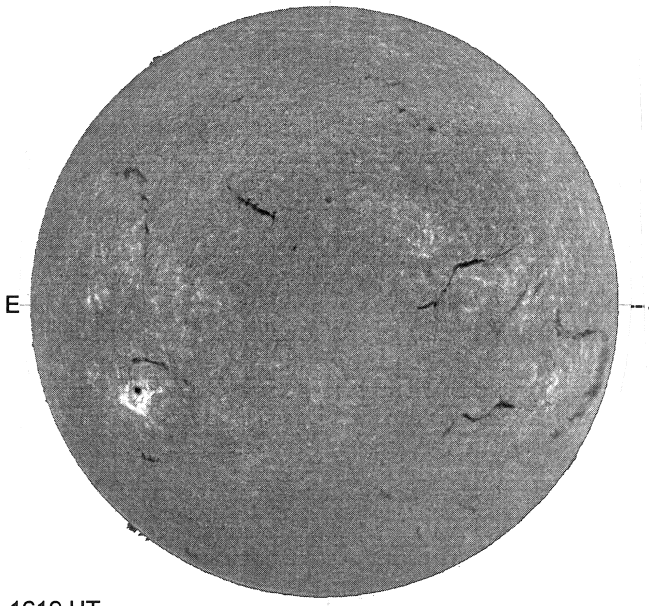

1619 UT

S

HOLLOMAN SUNSPOTS

HOLLOMAN SUNSPOTS
October 15, 2004
1430 UT, Good
Bp = 5.8
Po = 26.1
Lo = 314.1

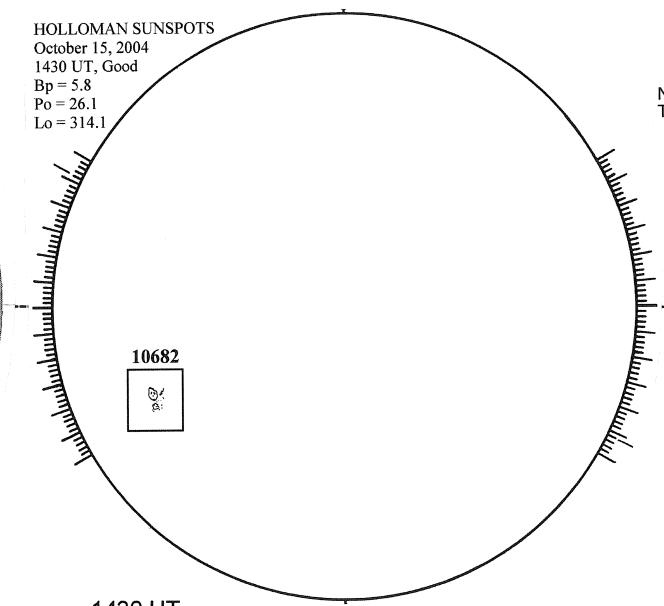

1430 UT

S

SACRAMENTO PEAK CORONA (1.15 Radii)----

NSO / SACRAMENTO PEAK CORONAL DATA
TICK MARKS EVERY 10 MILLIONTHS

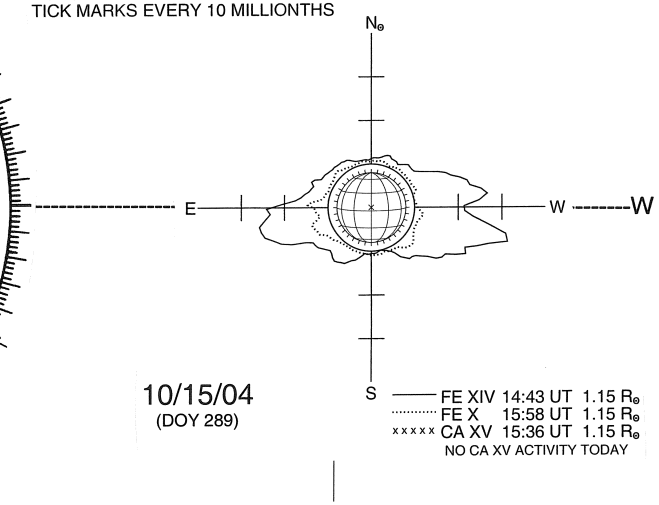

10/15/04
(DOY 289)

FE XIV 14:43 UT 1.15 R☉
FE X 15:58 UT 1.15 R☉
xxxxx CA XV 15:36 UT 1.15 R☉
NO CA XV ACTIVITY TODAY

S