OCTOBER 6, 2004 (P= 26.23, Bo = 6.44, Lo = 80.66)

KITT PEAK MAGNETOGRAM--SOLIS

N **854.2 nm**

Bright = +
Dark = -

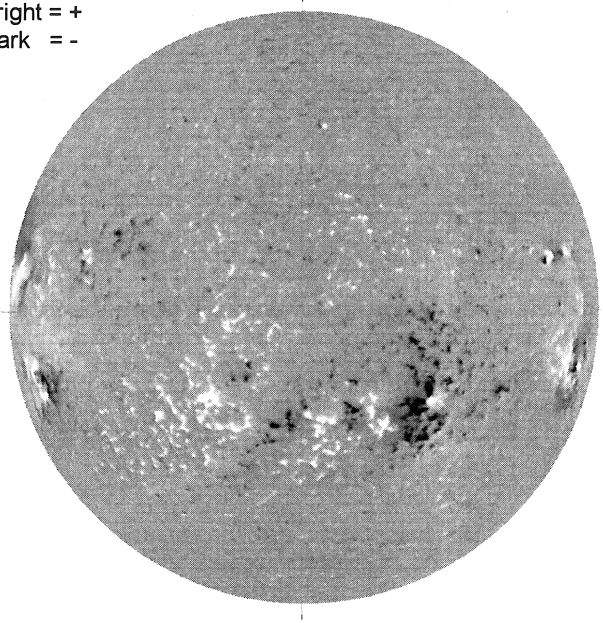

E-

1721 UT

STANFORD MAGNETOGRAM

N

Solid = +
Dashed = -

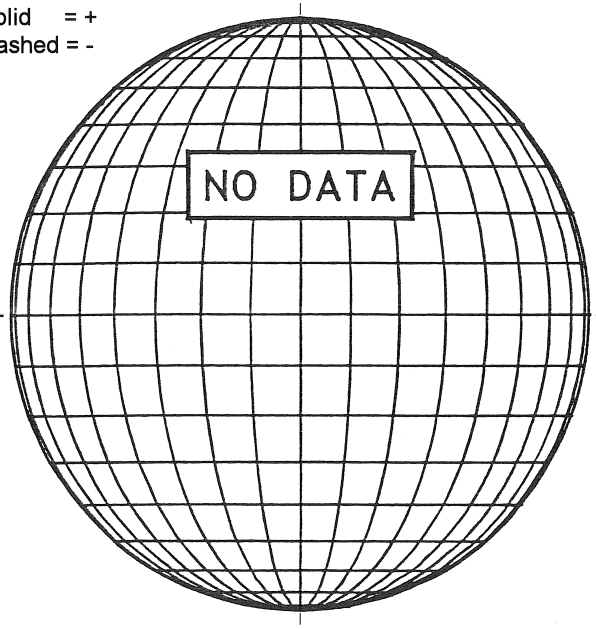

MT. WILSON MAGNETOGRAM

N

DeltaY = 13.0
DeltaX = 9.6

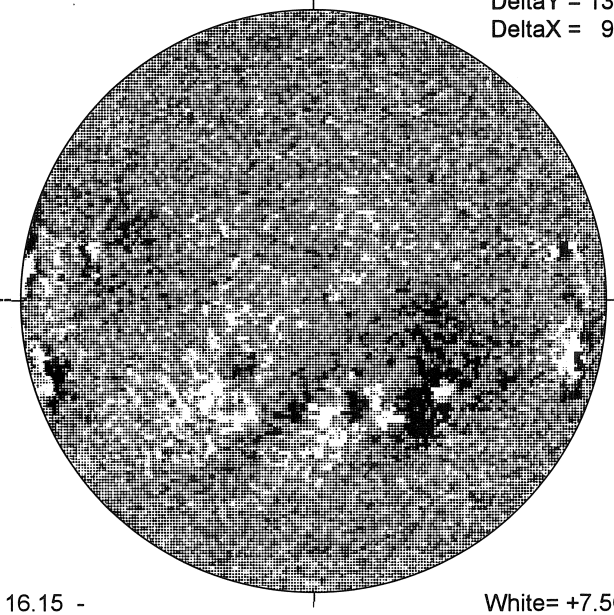

-W

16.15 -
17.10 UT

White= +7.5G
Black = -7.5G

BIG BEAR H-ALPHA

E

1551 UT

S

HOLLOMAN SUNSPOTS

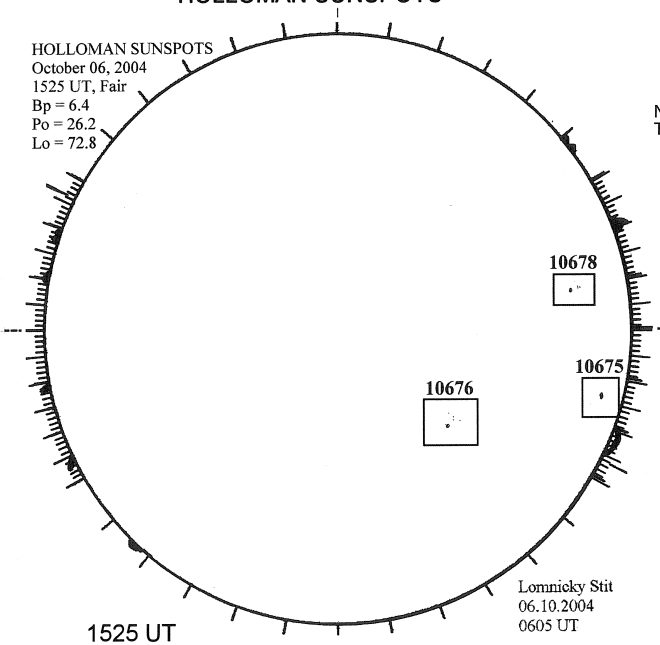

1525 UT
0605 UT LOMN Prom S

SACRAMENTO PEAK CORONA (1.15 Radii)----

NSO / SACRAMENTO PEAK CORONAL DATA
TICK MARKS EVERY 10 MILLIONTHS

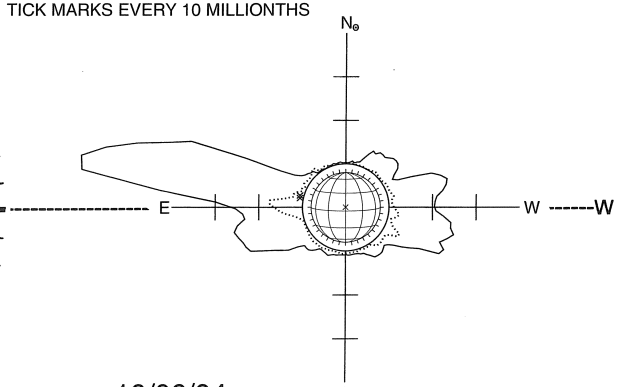

10/06/04
(DOY 280)

FE XIV 17:35 UT 1.15 R☉
FE X 18:47 UT 1.15 R☉
xxxxx CA XV 18:28 UT 1.15 R☉

S