OCTOBER 5, 2004 (P= 26.20, Bo = 6.50, Lo = 93.86)

KITT PEAK MAGNETOGRAM--SOLIS

N **854.2 nm**

Bright = +
Dark = -

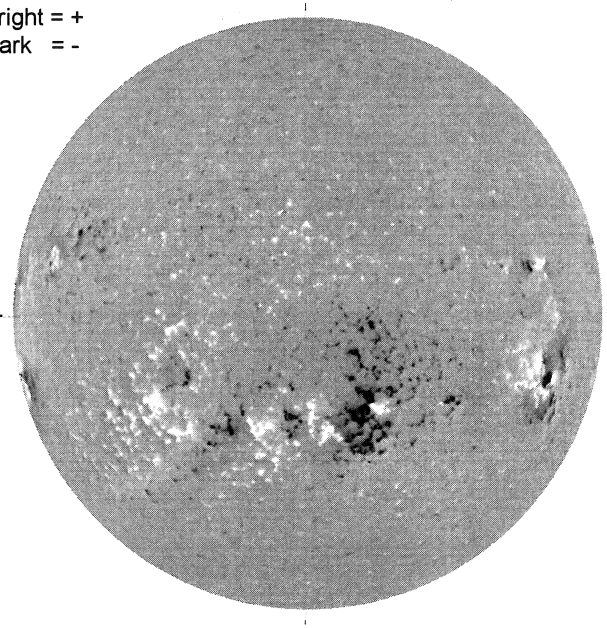

E-

1753 UT

STANFORD MAGNETOGRAM

N

Solid = +
Dashed = -

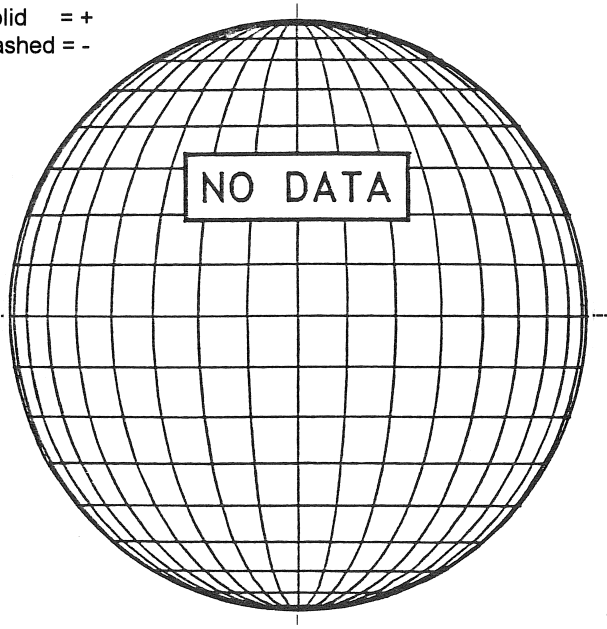

MT. WILSON MAGNETOGRAM

N

DeltaY = 20.1
DeltaX = 12.9

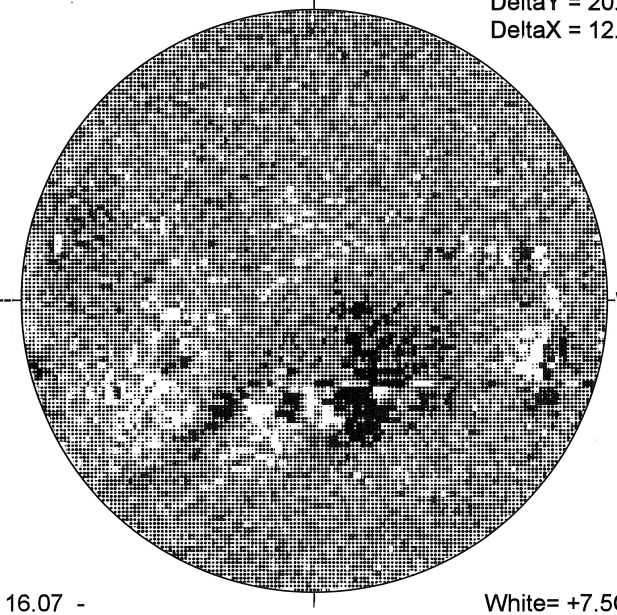

-W

16.07 -
16.49 UT

White= +7.5G
Black = -7.5G

BIG BEAR H-ALPHA

E

1604 UT

S

HOLLOMAN SUNSPOTS

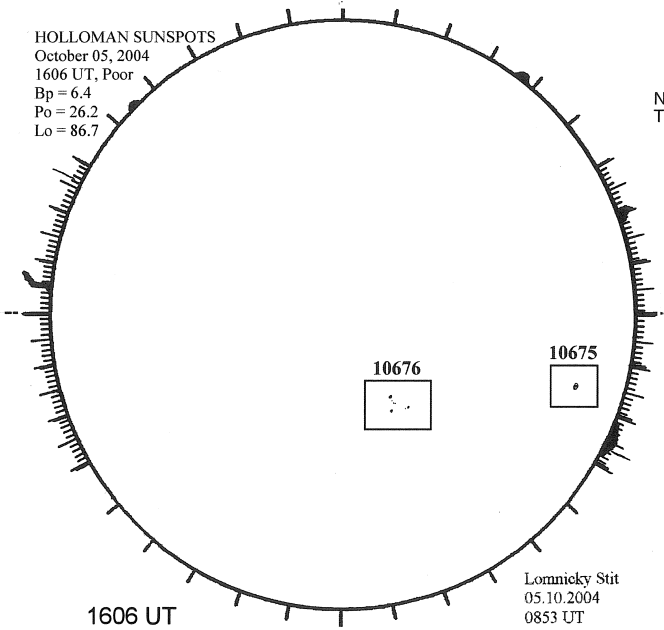

1606 UT
0853 UT LOMN Prom S

SACRAMENTO PEAK CORONA (1.15 Radii)----

NSO / SACRAMENTO PEAK CORONAL DATA
TICK MARKS EVERY 10 MILLIONTHS

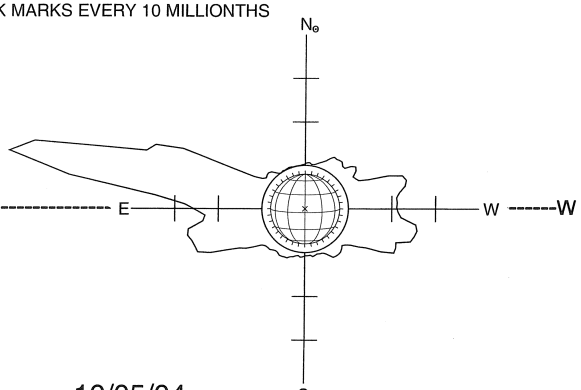

------W

10/05/04
(DOY 279)

FE XIV 20:50 UT 1.15 R⊙

S