AUGUST 31, 2004 (P= 20.89, Bo = 7.18, Lo = 195.91)

KITT PEAK MAGNETOGRAM--SOLIS

854.2 nm

Bright = +
Dark = -

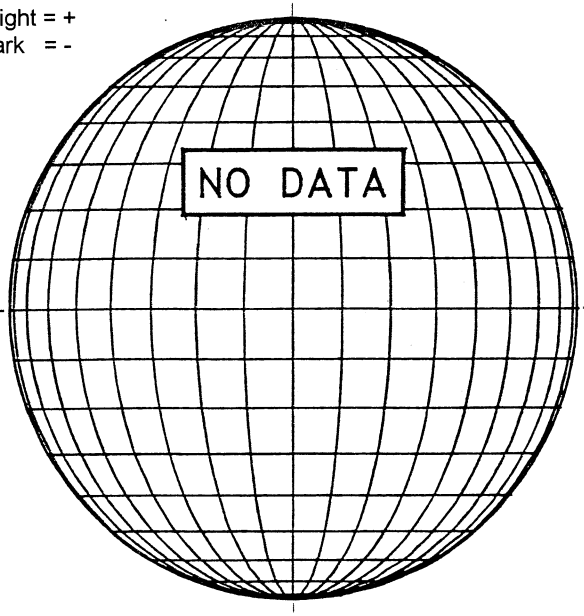

STANFORD MAGNETOGRAM

Solid = +
Dashed = -

2134 UT

MT. WILSON MAGNETOGRAM

DeltaY = 13.0
DeltaX = 9.6

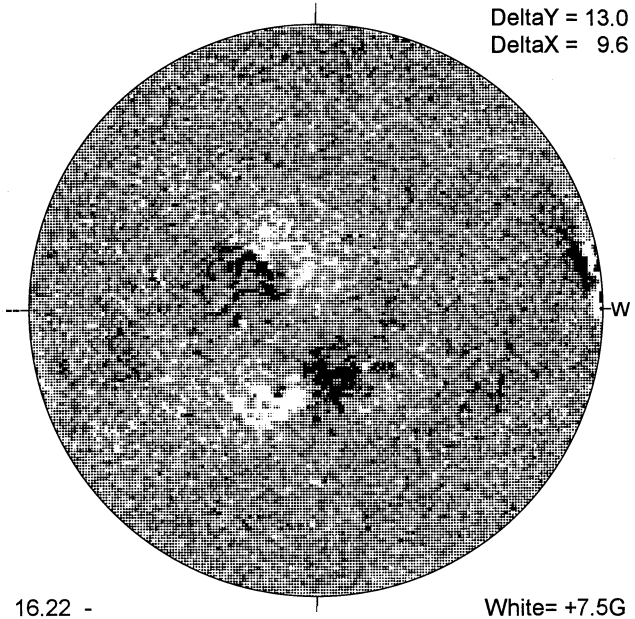

16.22 -
17.15 UT

White= +7.5G
Black = -7.5G

BIG BEAR H-ALPHA

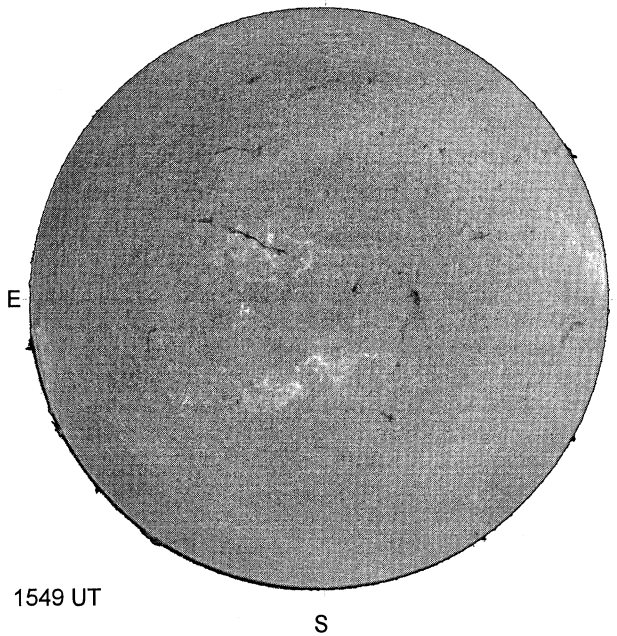

1549 UT

S

HOLLOMAN SUNSPOTS

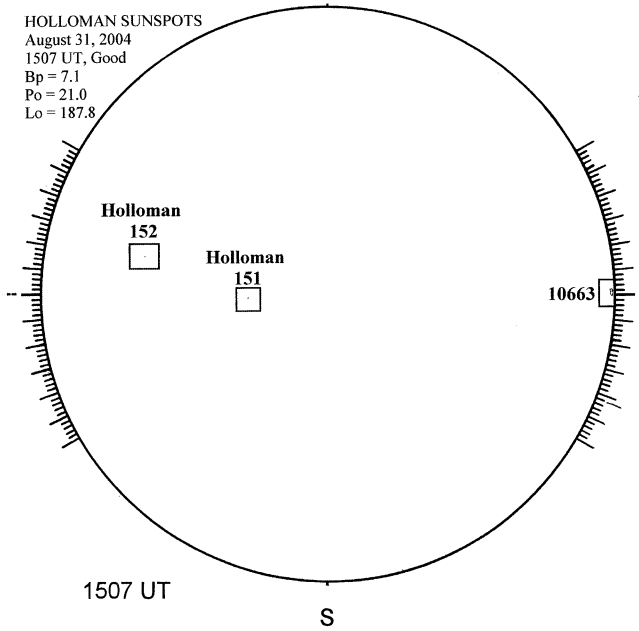

1507 UT

S

SACRAMENTO PEAK CORONA (1.15 Radii)----

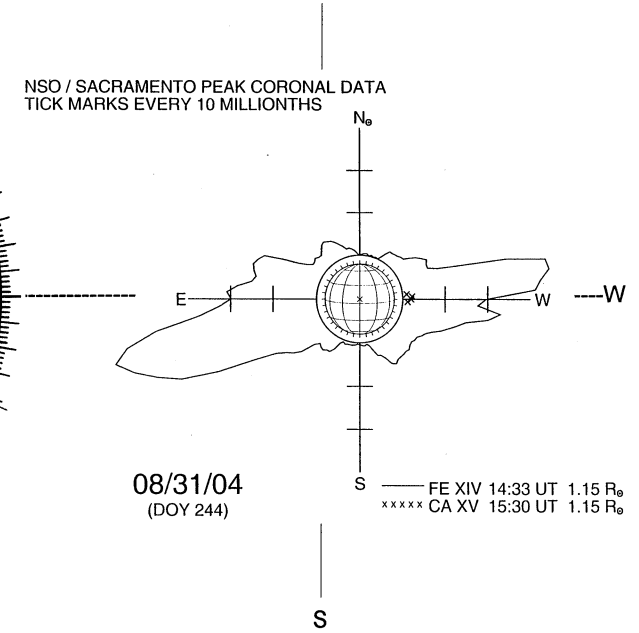

08/31/04
(DOY 244)

S