AUGUST 30, 2004 (P= 20.63, Bo = 7.17, Lo = 209.12)

KITT PEAK MAGNETOGRAM—SOLIS

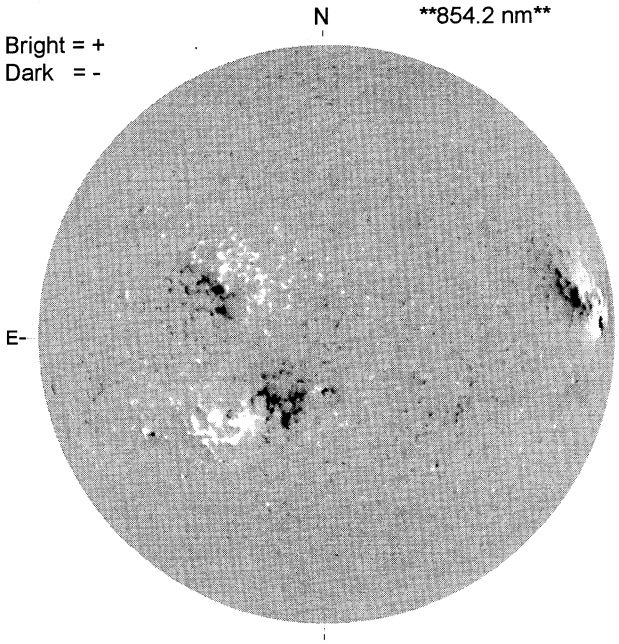

STANFORD MAGNETOGRAM

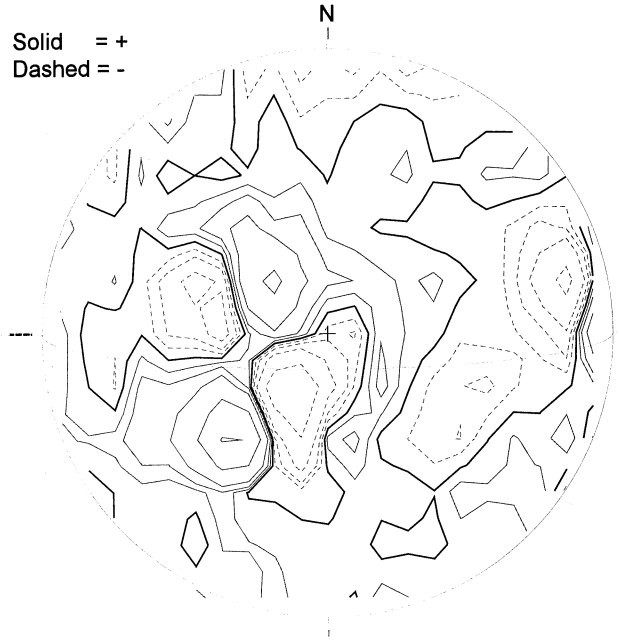

MT. WILSON MAGNETOGRAM

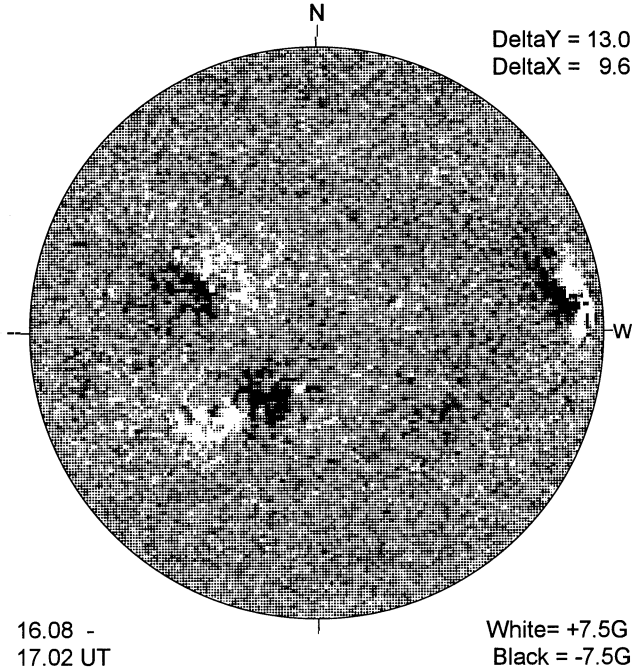

BIG BEAR H-ALPHA

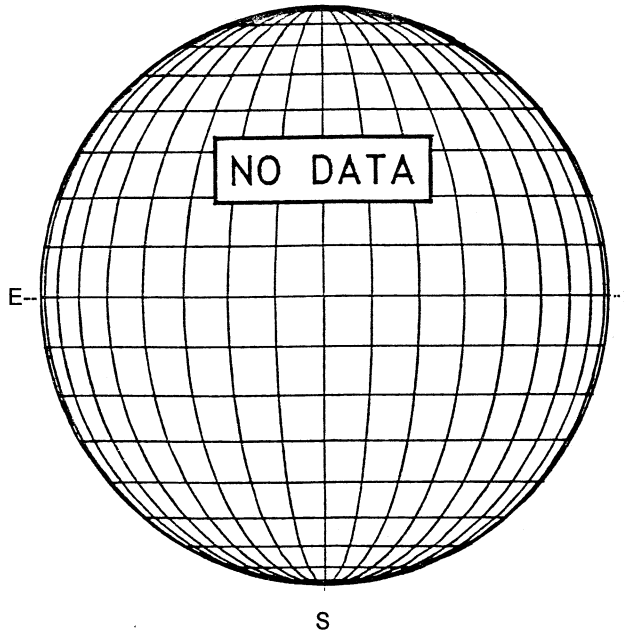

HOLLOMAN SUNSPOTS

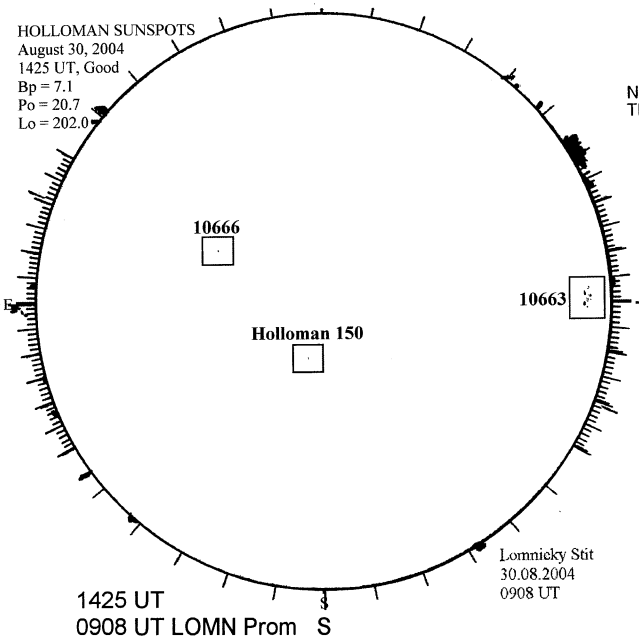
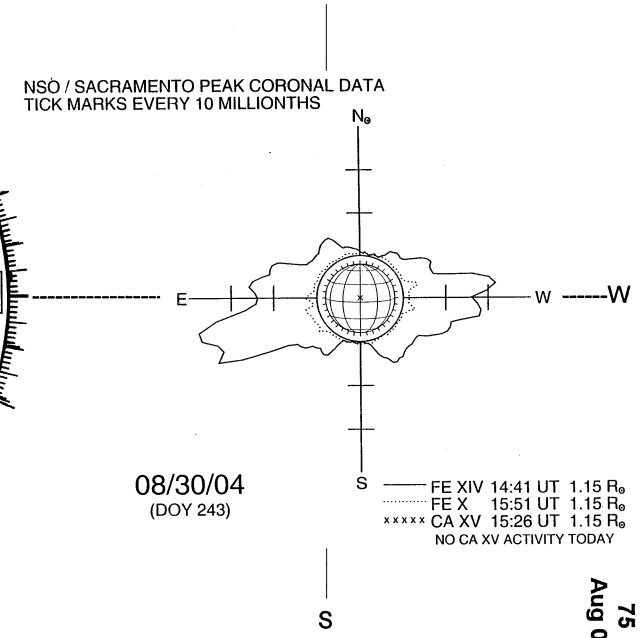
SACRAMENTO PEAK CORONA (1.15 Radii)----