AUGUST 27, 2004 (P= 19.82, Bo = 7.10, Lo = 248.75)

KITT PEAK MAGNETOGRAM--SOLIS

854.2 nm

Bright = +
Dark = -

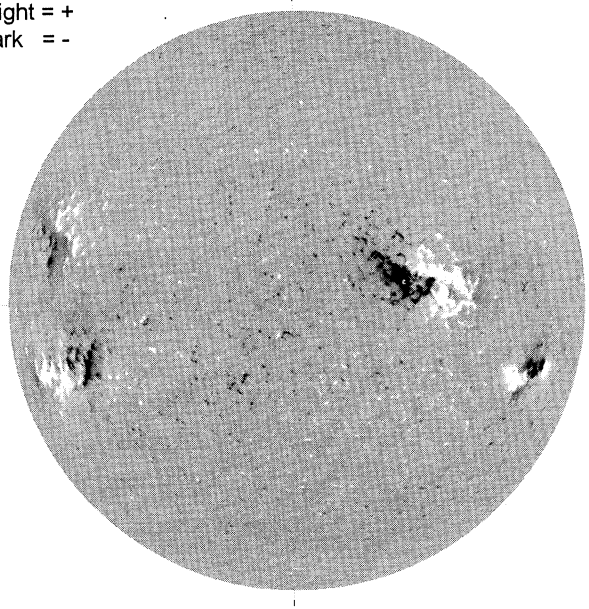

1832 UT

STANFORD MAGNETOGRAM

Solid = +
Dashed = -

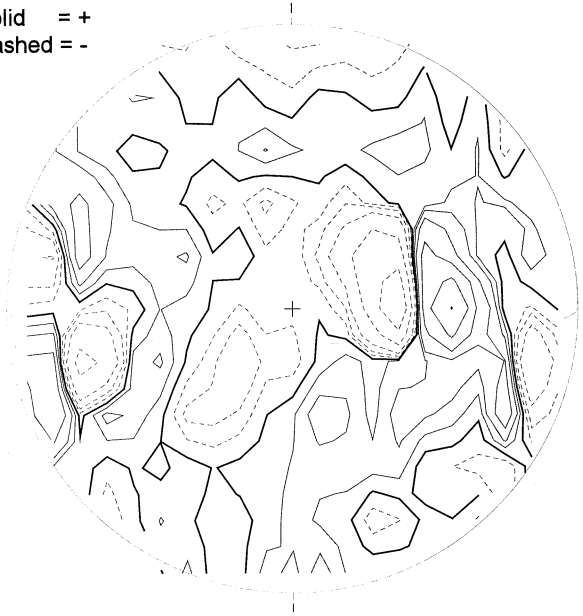

1913 UT

MT. WILSON MAGNETOGRAM

DeltaY = 13.0
DeltaX = 9.6

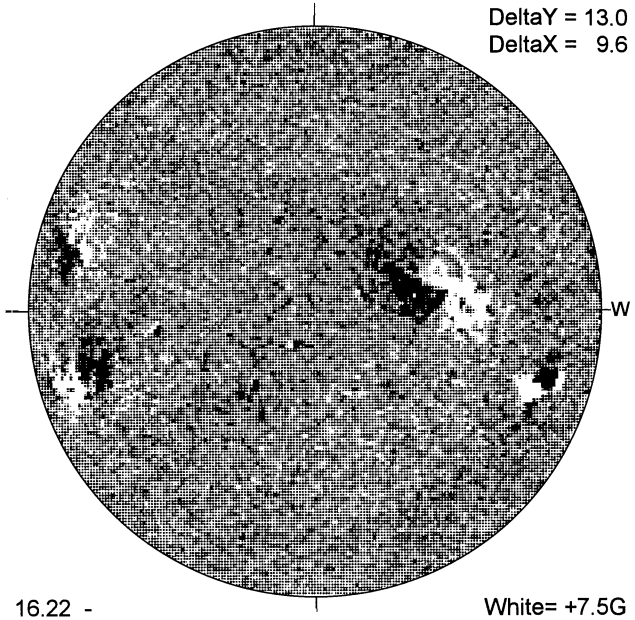

16.22 -
17.16 UT

White= +7.5G
Black = -7.5G

BIG BEAR H-ALPHA

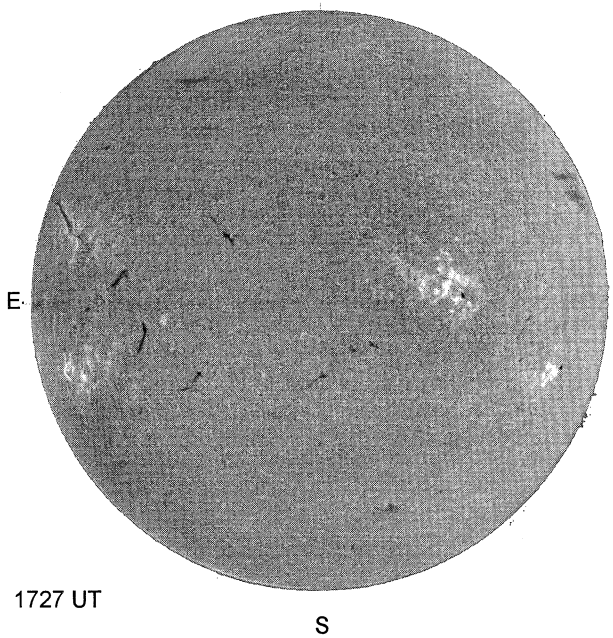

1727 UT

HOLLOMAN SUNSPOTS

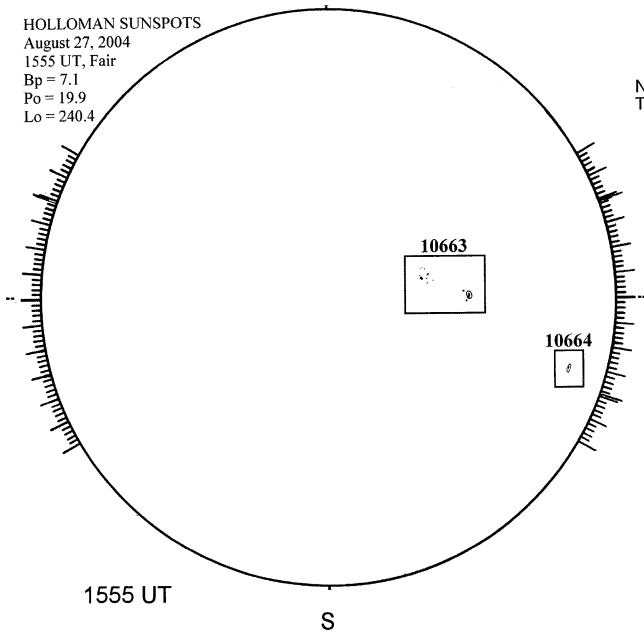

1555 UT

SACRAMENTO PEAK CORONA (1.15 Radii)

NSO / SACRAMENTO PEAK CORONAL DATA
TICK MARKS EVERY 10 MILLIONTHS

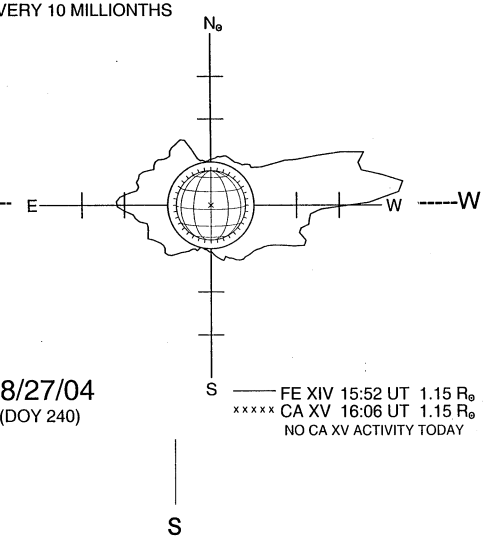

08/27/04
(DOY 240)

FE XIV 15:52 UT 1.15 R
xxxxx CA XV 16:06 UT 1.15 R
NO CA XV ACTIVITY TODAY