**AUGUST 26, 2004 ( P= 19.54, Bo = 7.07, Lo = 261.96)**

KITT PEAK MAGNETOGRAM--SOLIS

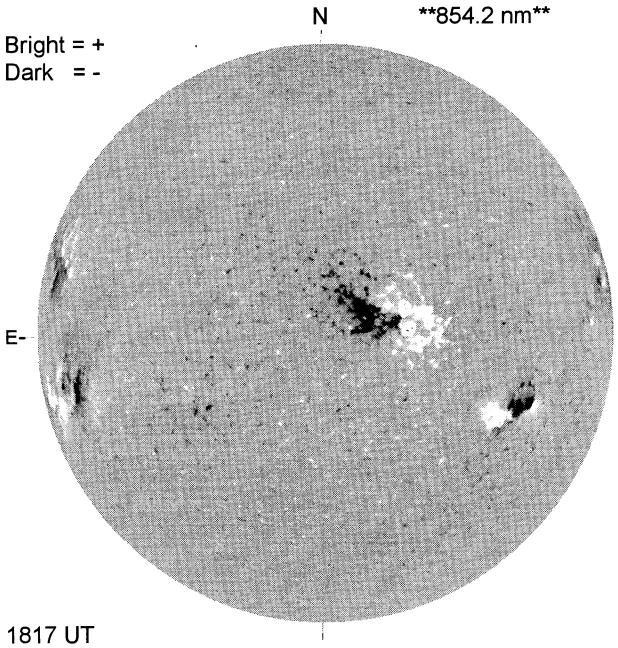


STANFORD MAGNETOGRAM

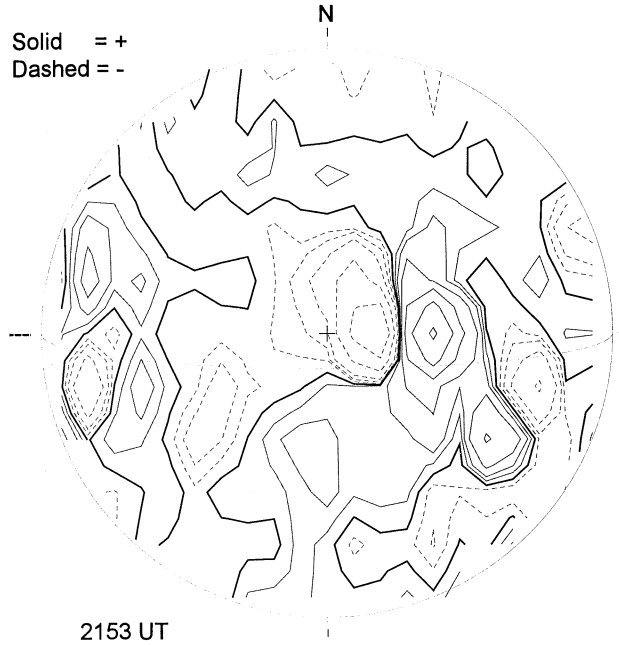


MT. WILSON MAGNETOGRAM

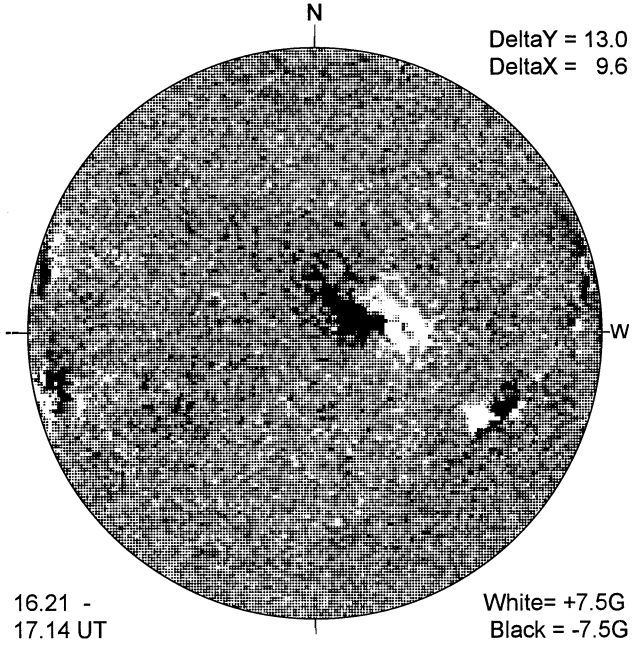


BIG BEAR H-ALPHA

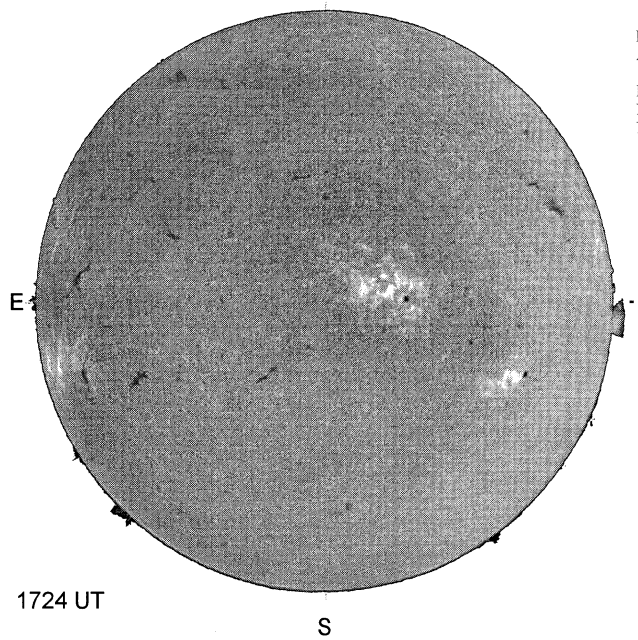


HOLLOMAN SUNSPOTS

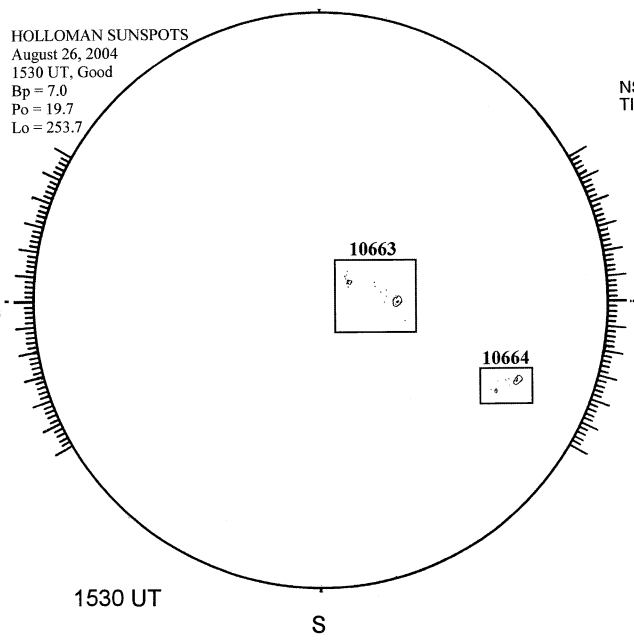

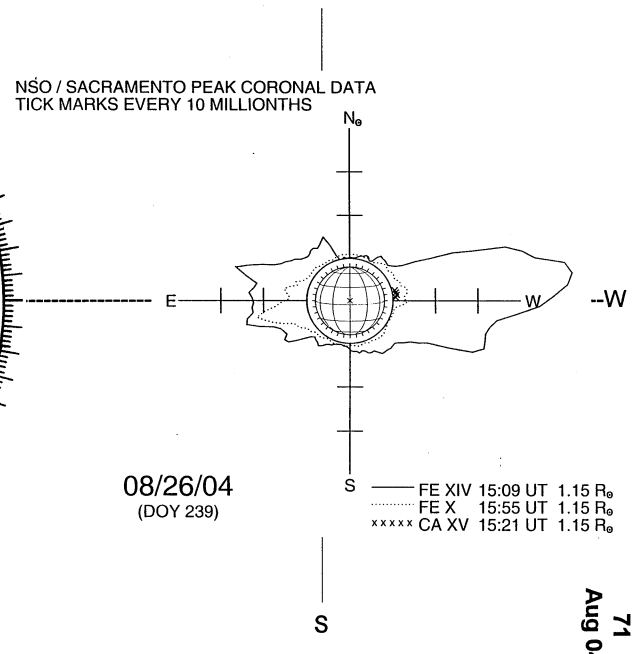
SACRAMENTO PEAK CORONA (1.15 Radii)----