# AUGUST 25, 2004 ( P= 19.25, Bo = 7.05, Lo = 275.18)

## KITT PEAK MAGNETOGRAM--SOLIS

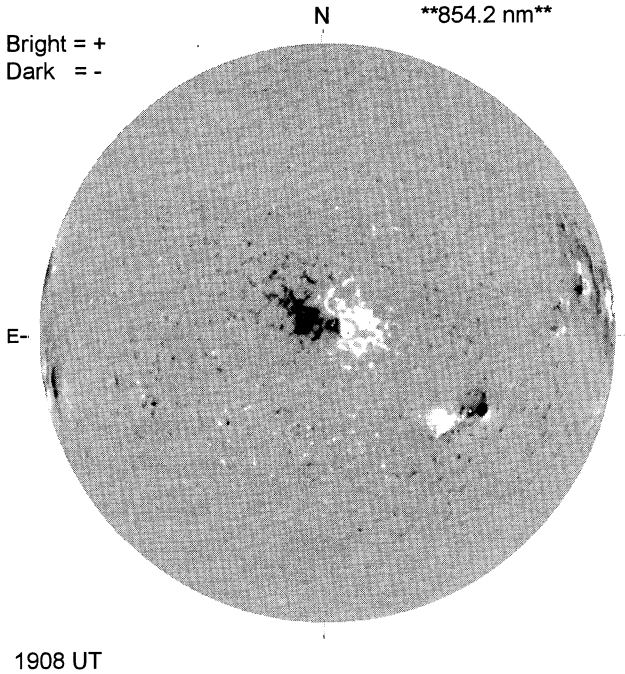


## STANFORD MAGNETOGRAM

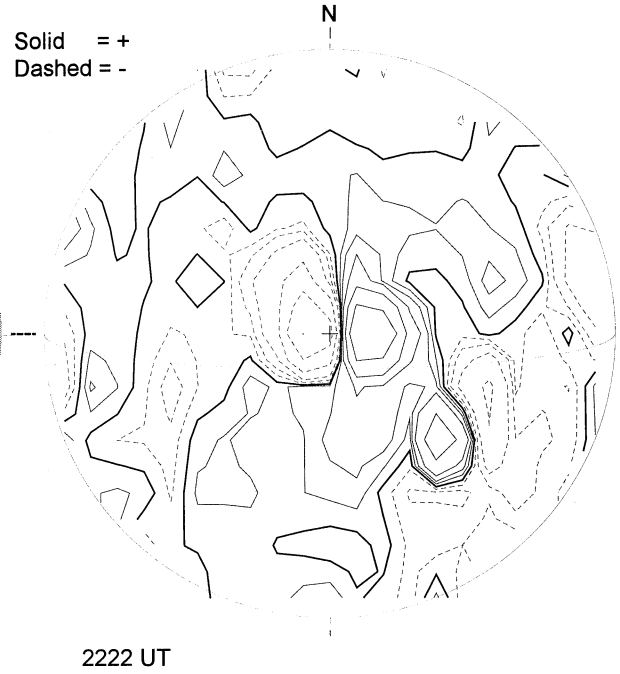


## MT. WILSON MAGNETOGRAM

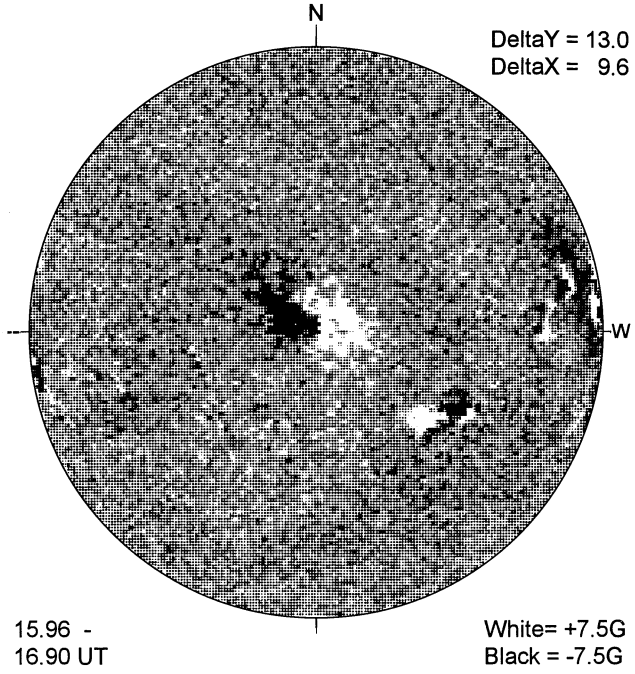


## BIG BEAR H-ALPHA

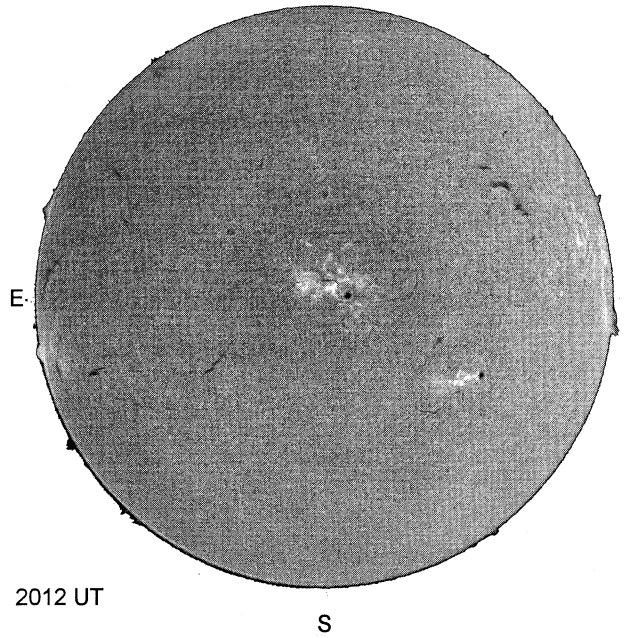


## HOLLOMAN SUNSPOTS

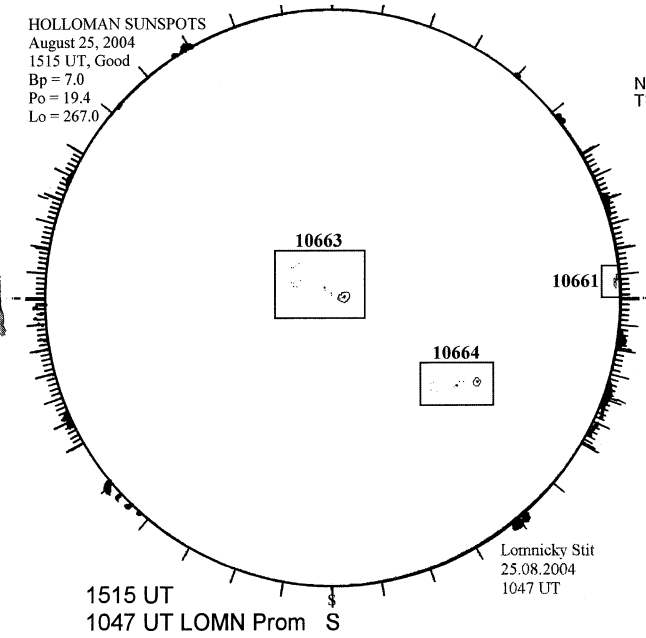

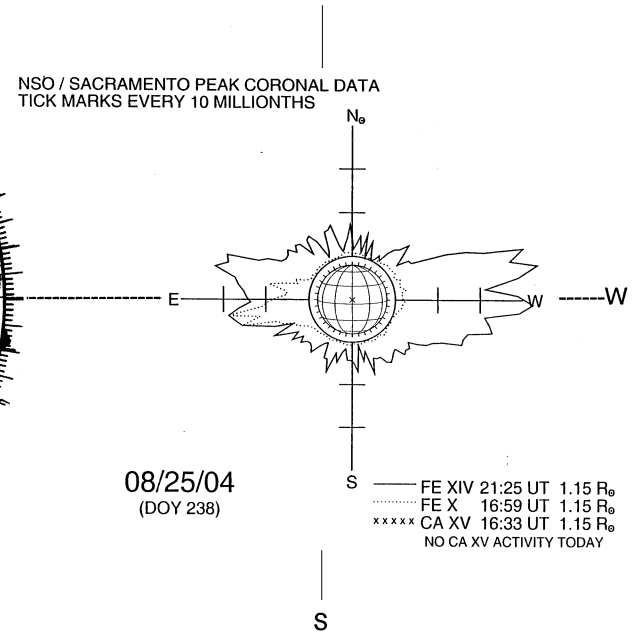
## SACRAMENTO PEAK CORONA (1.15 Radii)----