AUGUST 23, 2004 (P= 18.66, Bo = 6.98, Lo = 301.60)

KITT PEAK MAGNETOGRAM--SOLIS

854.2 nm

Bright = +
Dark = -

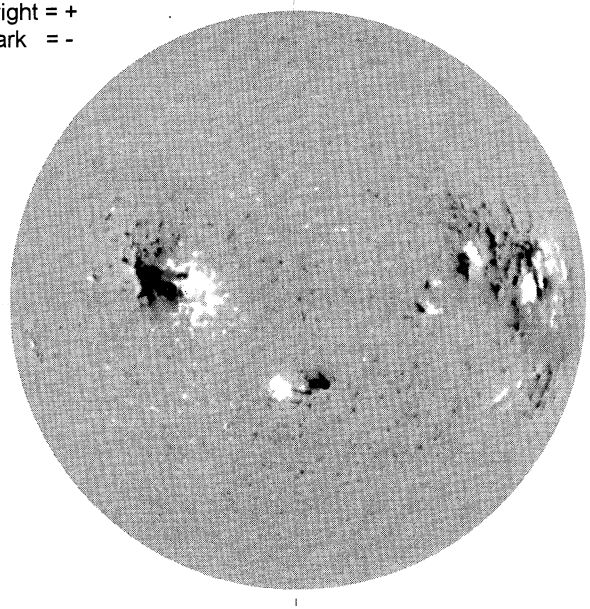

1737 UT

STANFORD MAGNETOGRAM

Solid = +
Dashed = -

1927 UT

MT. WILSON MAGNETOGRAM

DeltaY = 13.0
DeltaX = 9.6

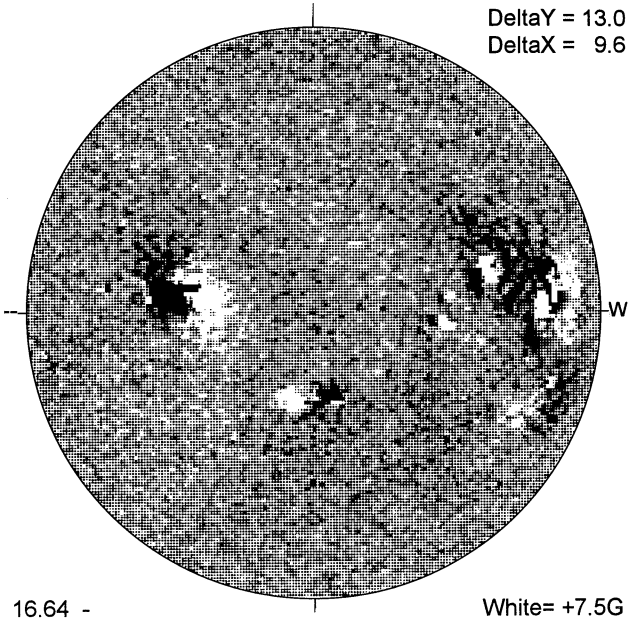

16.64 -
17.58 UT

White= +7.5G
Black = -7.5G

BIG BEAR H-ALPHA

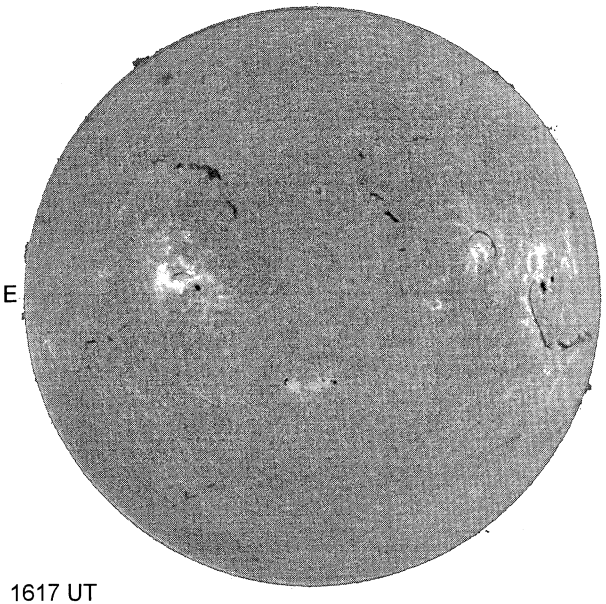

1617 UT

S

HOLLOMAN SUNSPOTS

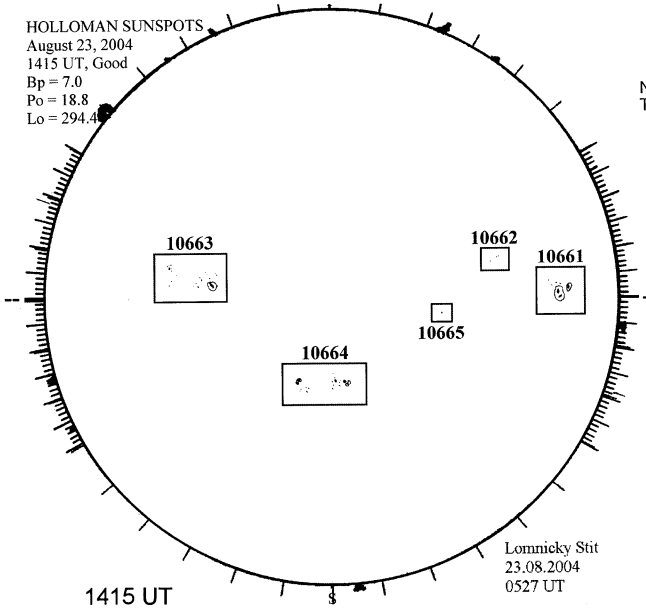

1415 UT
0527 UT LOMN Prom S

SACRAMENTO PEAK CORONA (1.15 Radii)

NSO / SACRAMENTO PEAK CORONAL DATA
TICK MARKS EVERY 10 MILLIONTHS

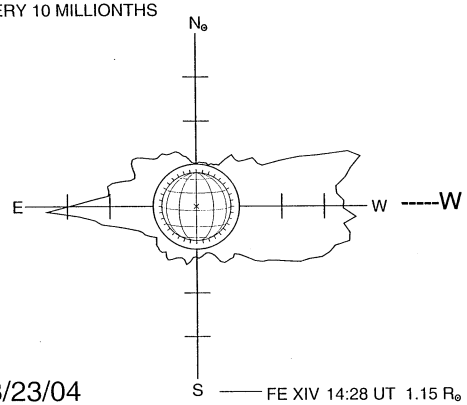

08/23/04
(DOY 236)

S