AUGUST 20, 2004 (P= 17.74, Bo = 6.88, Lo = 341.25)

KITT PEAK MAGNETOGRAM--SOLIS

854.2 nm

Bright = +
Dark = -

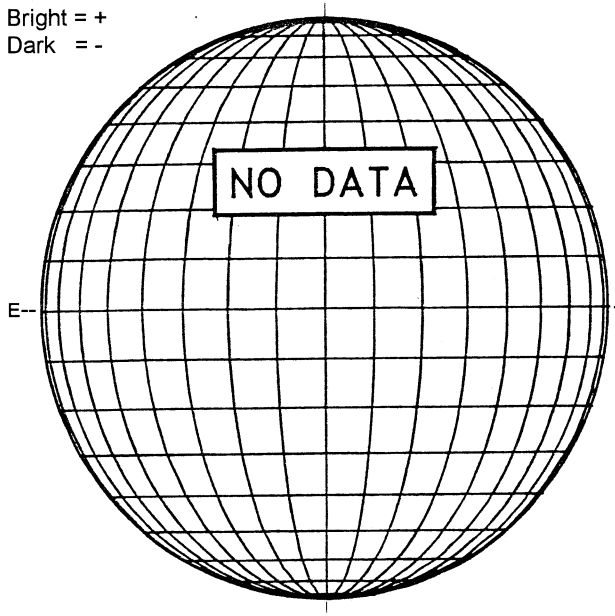

STANFORD MAGNETOGRAM

Solid = +
Dashed = -

1913 UT

MT. WILSON MAGNETOGRAM

DeltaY = 13.0
DeltaX = 9.6

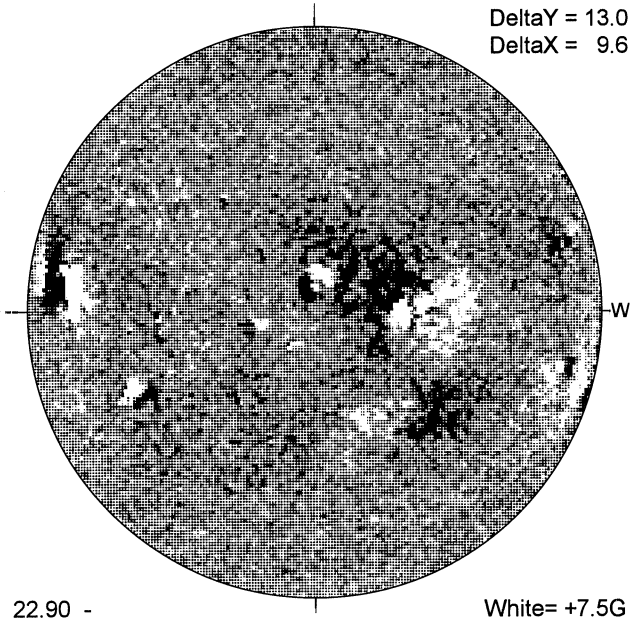

22.90 -
23.84 UT

White= +7.5G
Black = -7.5G

---- BIG BEAR-ALPHA

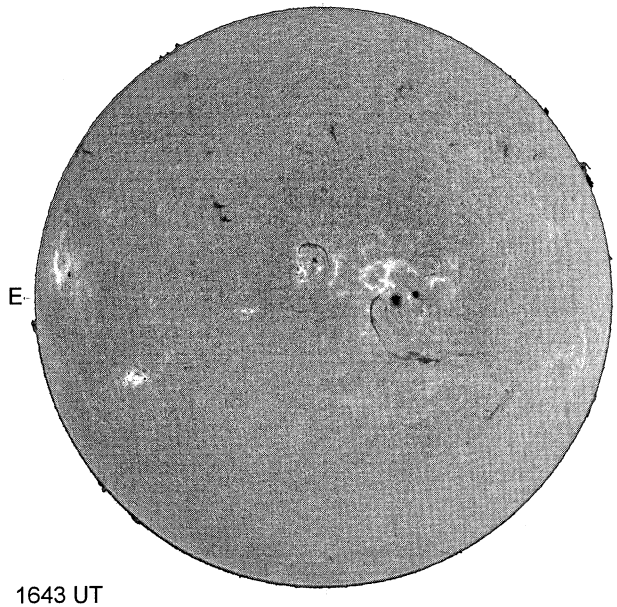

1643 UT

S

HOLLOMAN SUNSPOTS

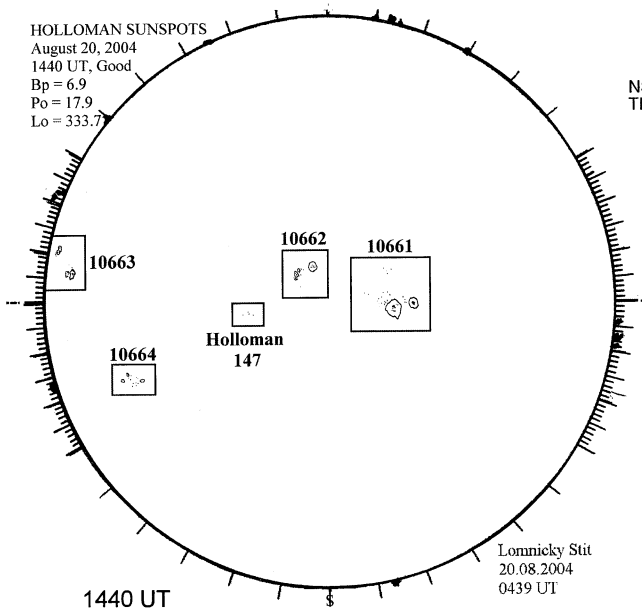

1440 UT
0439 UT LOMN Prom S

SACRAMENTO PEAK CORONA (1.15 Radii)----

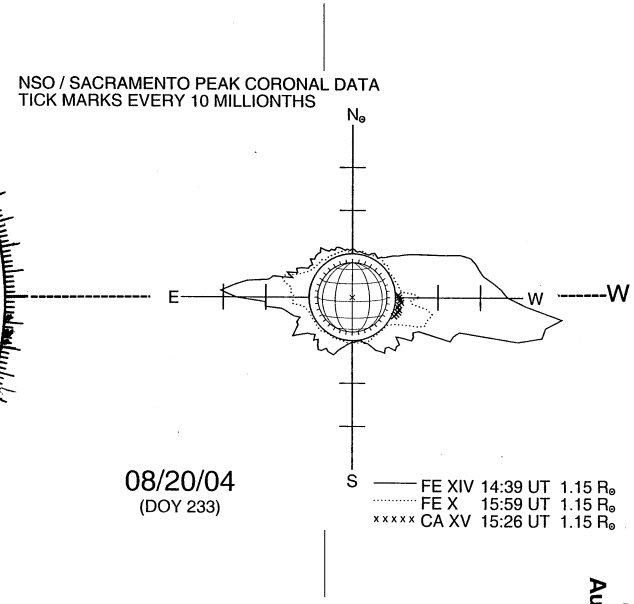

08/20/04
(DOY 233)

S