AUGUST 10, 2004 (P= 14.35, Bo = 6.39 Lo = 113.43)

KITT PEAK MAGNETOGRAM--SOLIS

854.2 nm

Bright = +
Dark = -

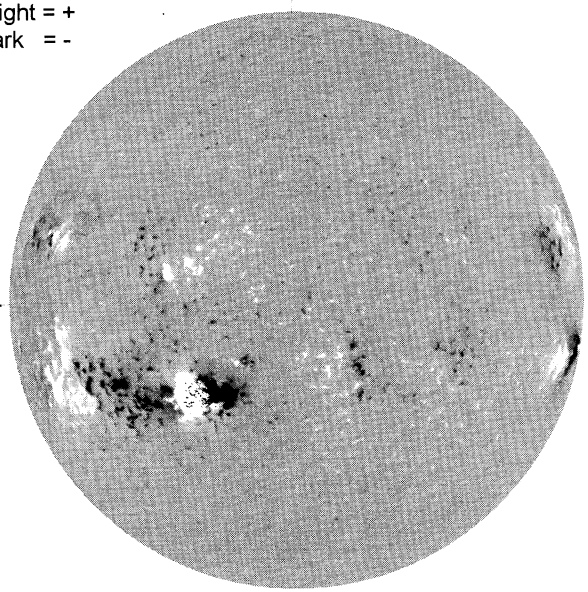

1738 UT

STANFORD MAGNETOGRAM

Solid = +
Dashed = -

2226 UT

MT. WILSON MAGNETOGRAM

DeltaY = 13.0
DeltaX = 9.6

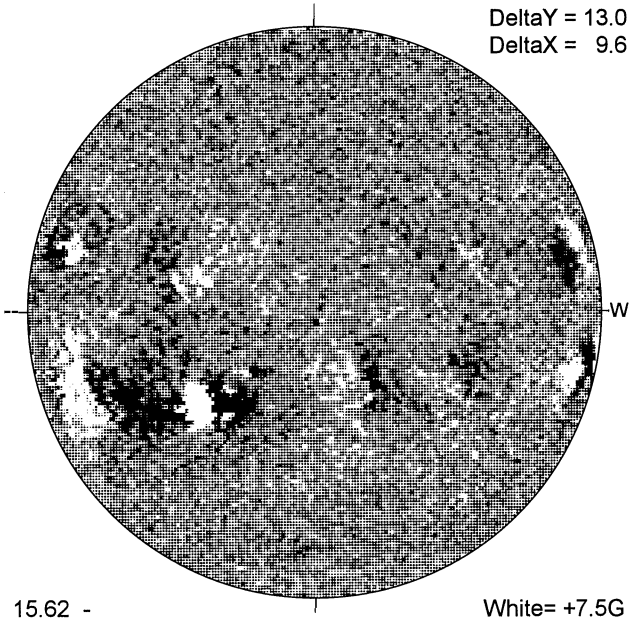

15.62 -
16.55 UT

White= +7.5G
Black = -7.5G

BIG BEAR H-ALPHA

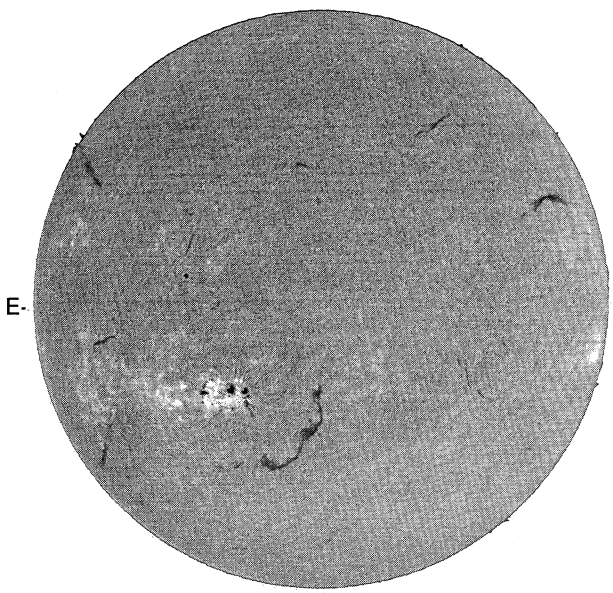

1611 UT

HOLLOMAN SUNSPOTS

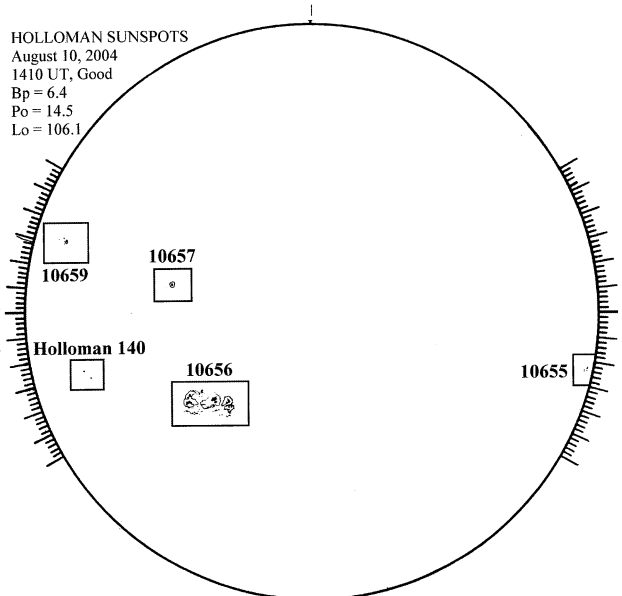

1410 UT

SACRAMENTO PEAK CORONA (1.15 Radii)----

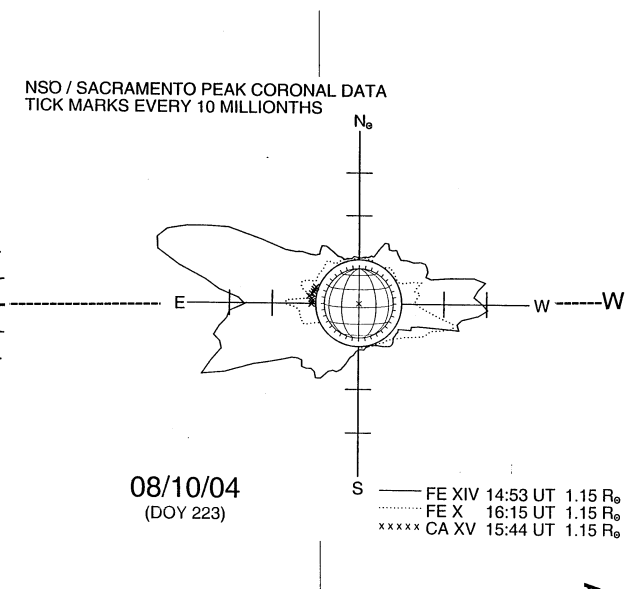

08/10/04
(DOY 223)