AUGUST 9, 2004 (P= 13.99, Bo = 6.33, Lo = 126.65)

KITT PEAK MAGNETOGRAM--SOLIS

Bright = +
Dark = -

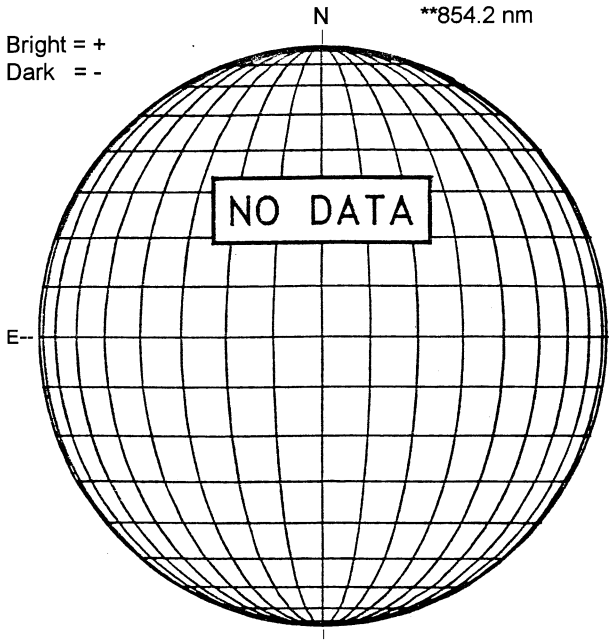

STANFORD MAGNETOGRAM

Solid = +
Dashed = -

2118 UT

MT. WILSON MAGNETOGRAM

DeltaY = 13.0
DeltaX = 9.6

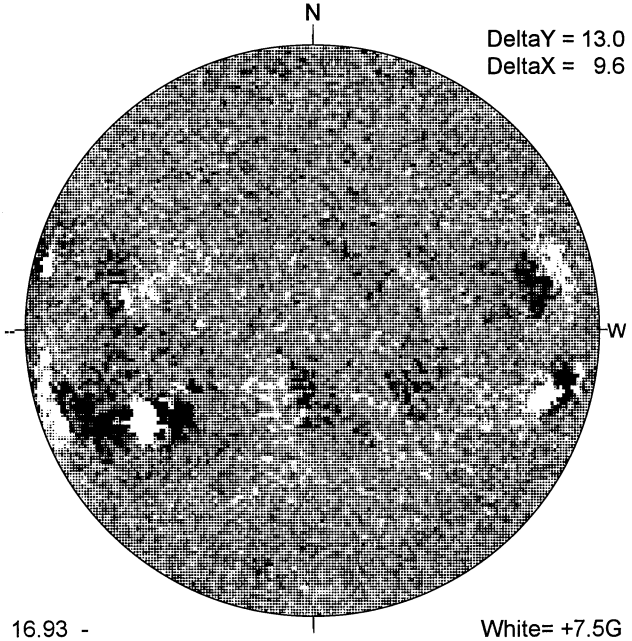

16.93 -
17.86 UT

White= +7.5G
Black = -7.5G

BIG BEAR H-ALPHA

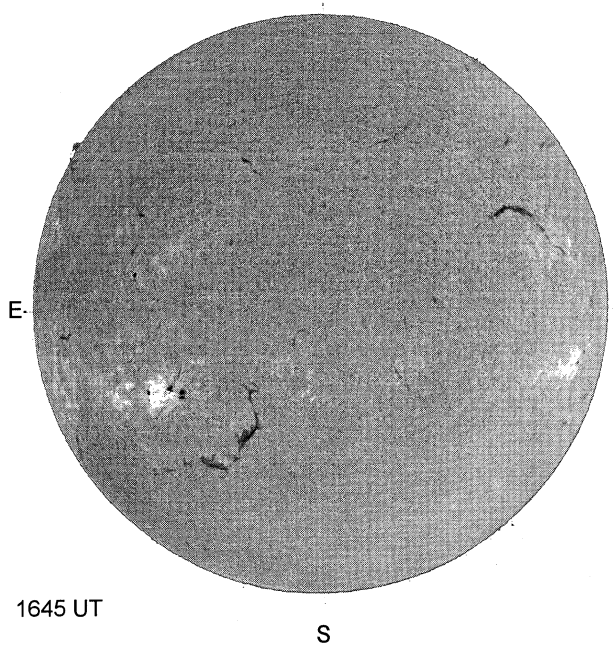

1645 UT

HOLLOMAN SUNSPOTS

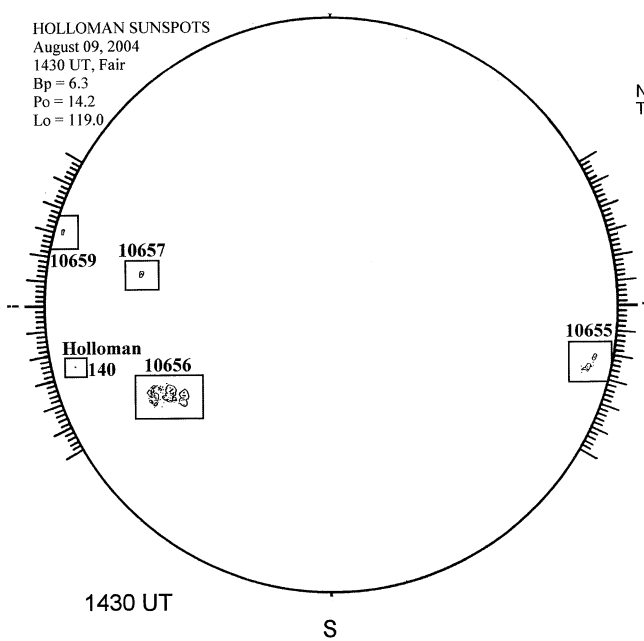

1430 UT

SACRAMENTO PEAK CORONA (1.15 Radii)----

NSO / SACRAMENTO PEAK CORONAL DATA
TICK MARKS EVERY 10 MILLIONTHS

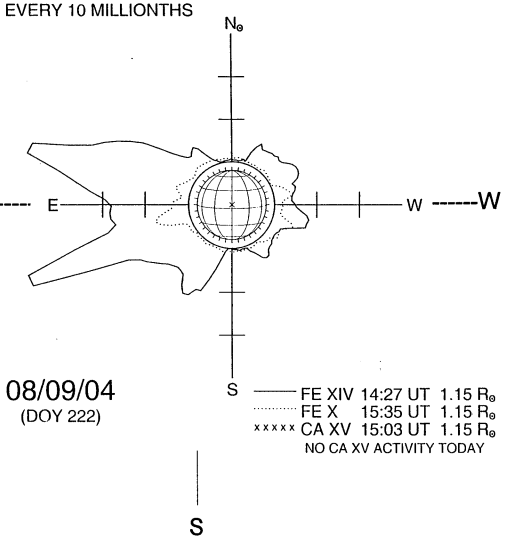

08/09/04
(DOY 222)

FE XIV 14:27 UT 1.15 R⊙
FE X 15:35 UT 1.15 R⊙
xxxxx CA XV 15:03 UT 1.15 R⊙
NO CA XV ACTIVITY TODAY