AUGUST 6, 2004 (P= 12.87, Bo = 6.15, Lo = 166.31)

KITT PEAK MAGNETOGRAM--SOLIS

854.2 nm

Bright = +
Dark = -

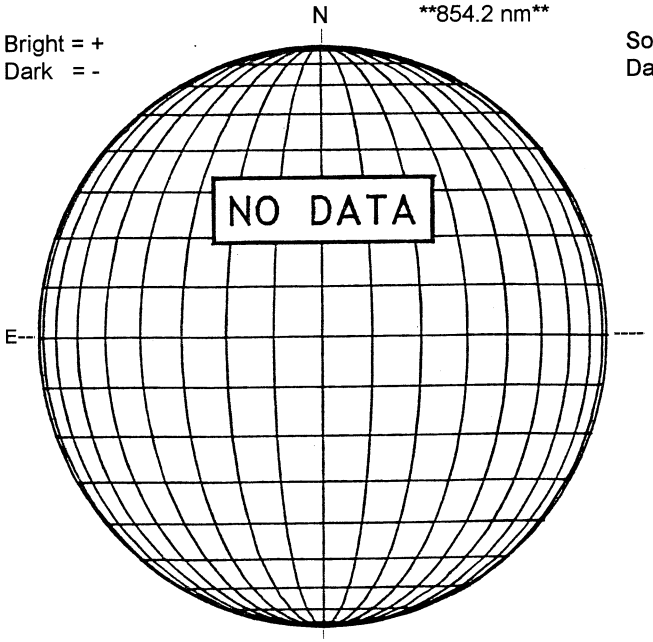

STANFORD MAGNETOGRAM

Solid = +
Dashed = -

1936 UT

MT. WILSON MAGNETOGRAM

DeltaY = 12.9
DeltaX = 9.6

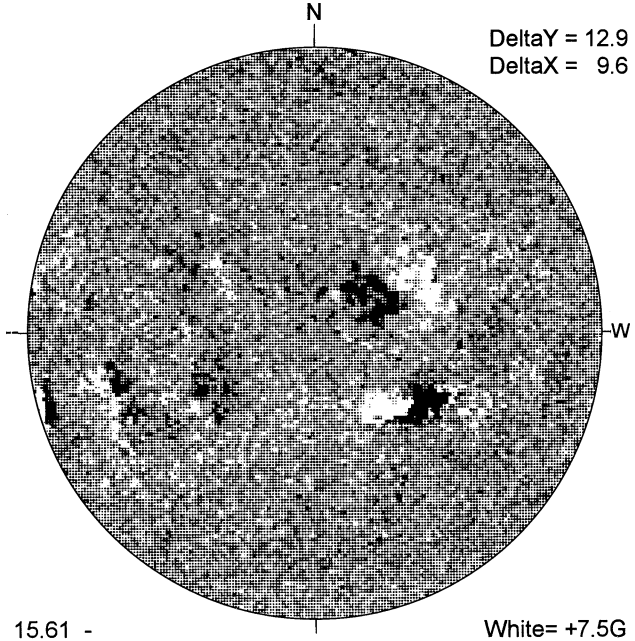

15.61 -
16.54 UT

White= +7.5G
Black = -7.5G

BIG BEAR H-ALPHA

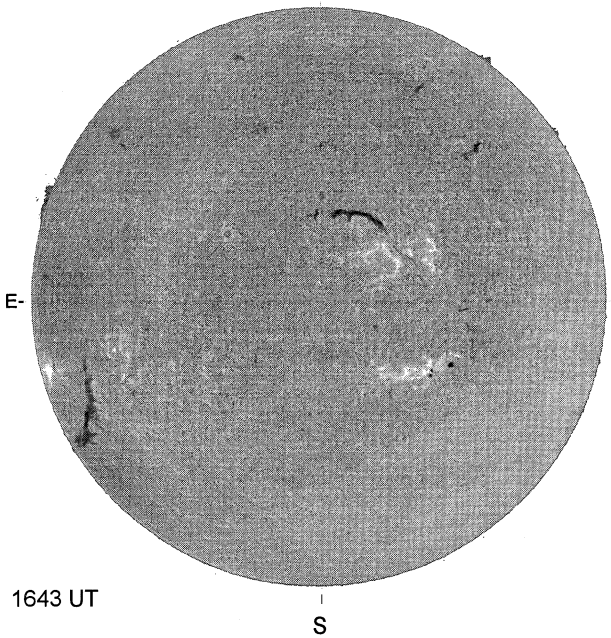

1643 UT

HOLLOMAN SUNSPOTS

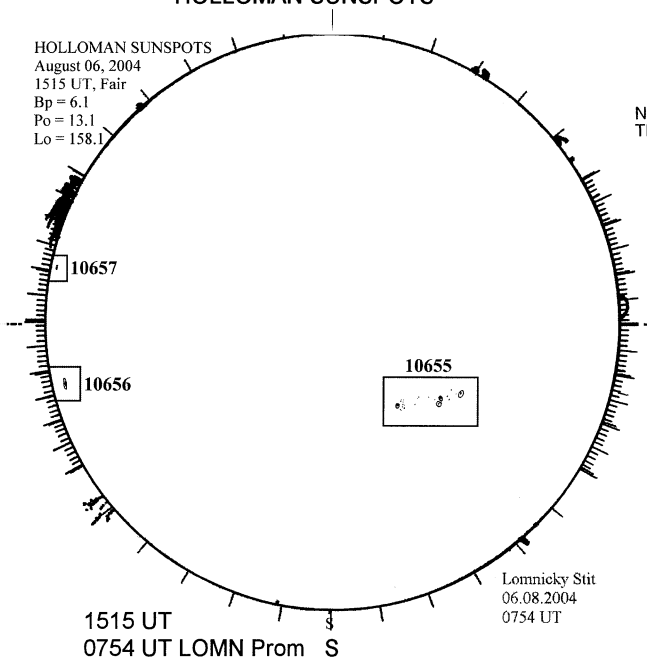

1515 UT
0754 UT LOMN Prom

SACRAMENTO PEAK CORONA (1.15 Radii)

NSO / SACRAMENTO PEAK CORONAL DATA
TICK MARKS EVERY 10 MILLIONTHS

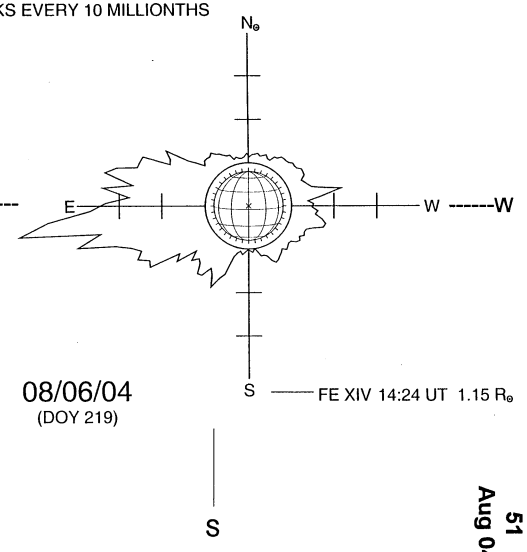

08/06/04
(DOY 219)

FE XIV 14:24 UT 1.15 R⊙