AUGUST 4, 2004 (P= 12.11, Bo = 6.02, Lo = 192.76)

KITT PEAK MAGNETOGRAM--SOLIS

854.2 nm

Bright = +
Dark = -

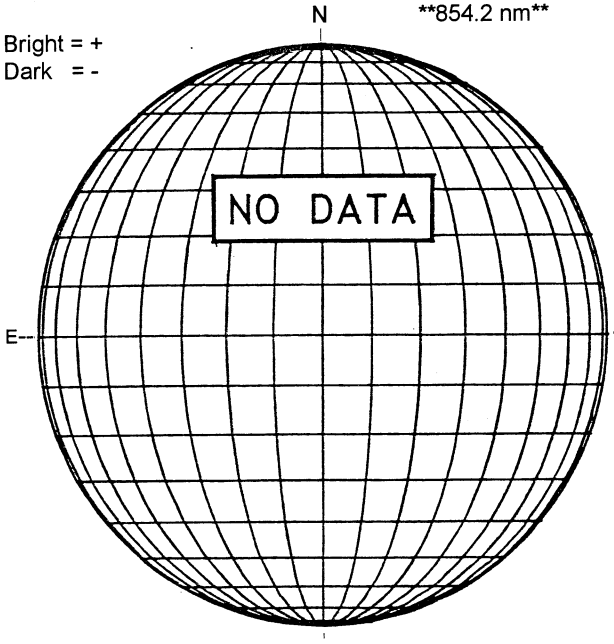

STANFORD MAGNETOGRAM

Solid = +
Dashed = -

2048 UT

MT. WILSON MAGNETOGRAM

DeltaY = 13.0
DeltaX = 9.6

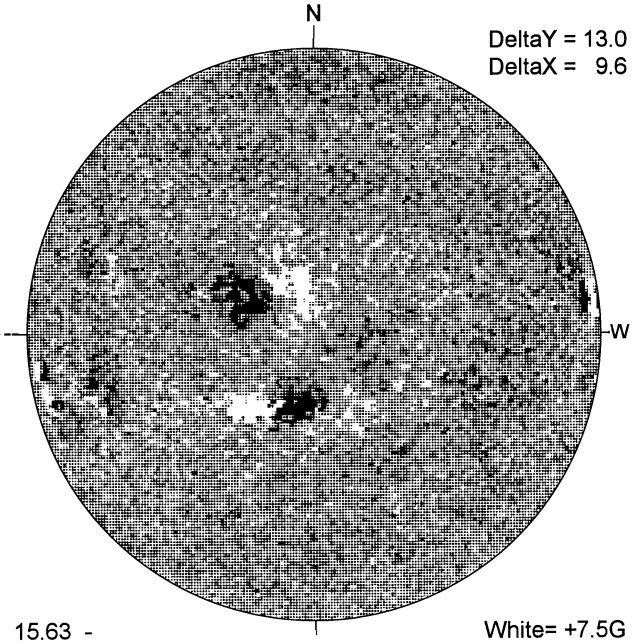

15.63 -
16.56 UT

White= +7.5G
Black = -7.5G

BIG BEAR H-ALPHA

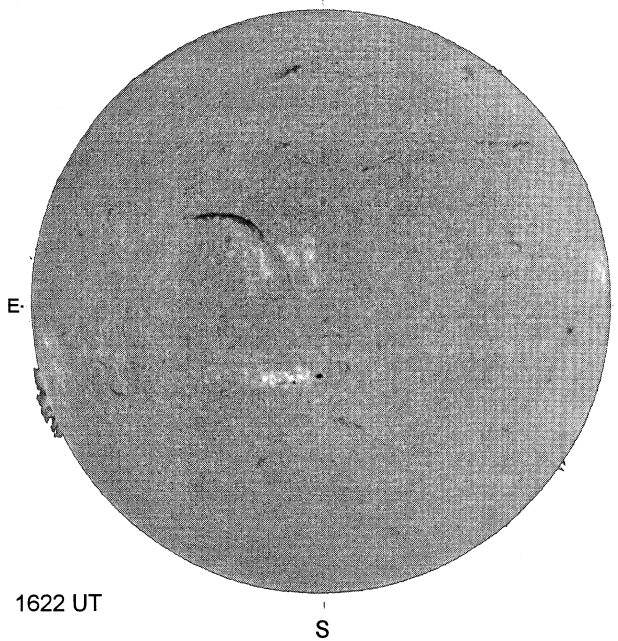

1622 UT

HOLLOMAN SUNSPOTS

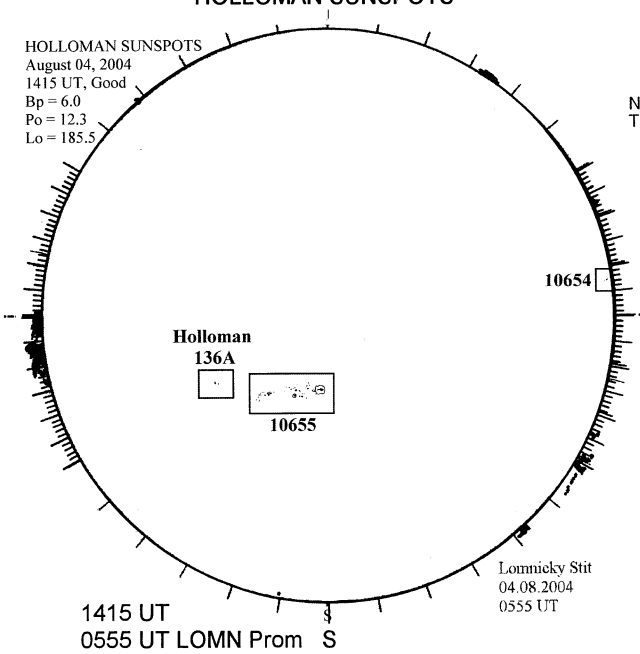

1415 UT
0555 UT LOMN Prom

SACRAMENTO PEAK CORONA (1.15 Radii)----

NSO / SACRAMENTO PEAK CORONAL DATA
TICK MARKS EVERY 10 MILLIONTHS

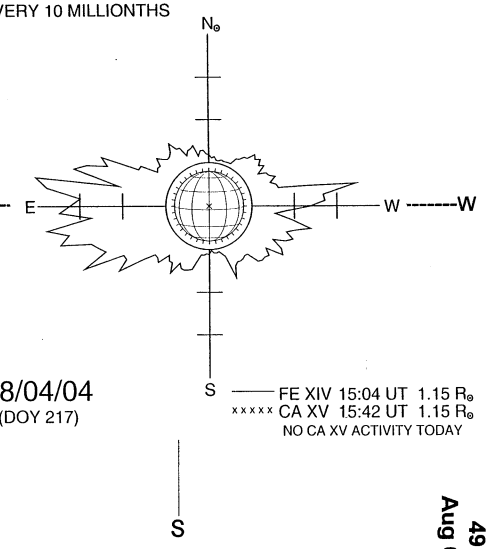

08/04/04
(DOY 217)

—— FE XIV 15:04 UT 1.15 R⊙
xxxxx CA XV 15:42 UT 1.15 R⊙
NO CA XV ACTIVITY TODAY