AUGUST 3, 2004 (P= 11.72, Bo = 5.95, Lo = 205.99)

KITT PEAK MAGNETOGRAM--SOLIS

854.2 nm

Bright = +
Dark = -

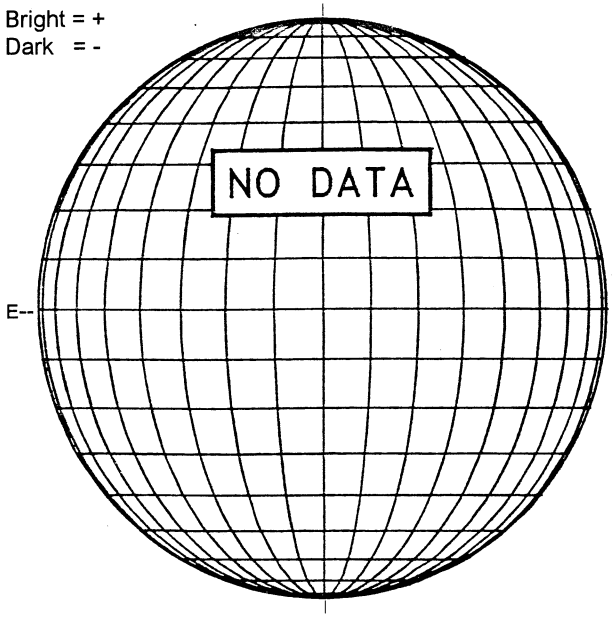

STANFORD MAGNETOGRAM

Solid = +
Dashed = -

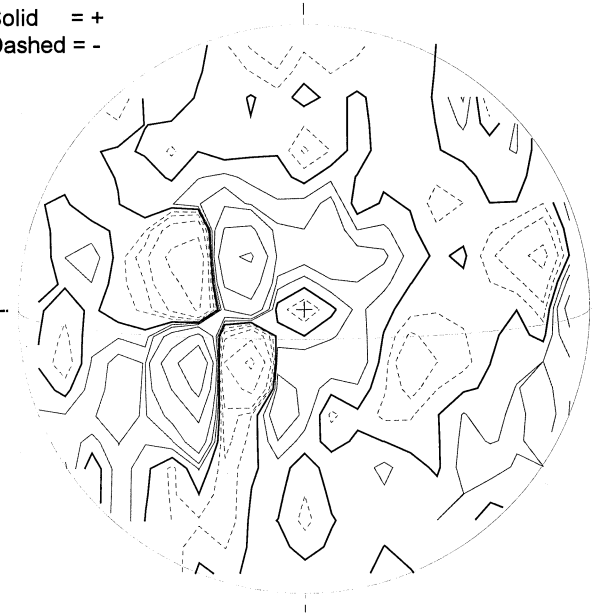

2024 UT

MT. WILSON MAGNETOGRAM

DeltaY = 12.9
DeltaX = 9.6

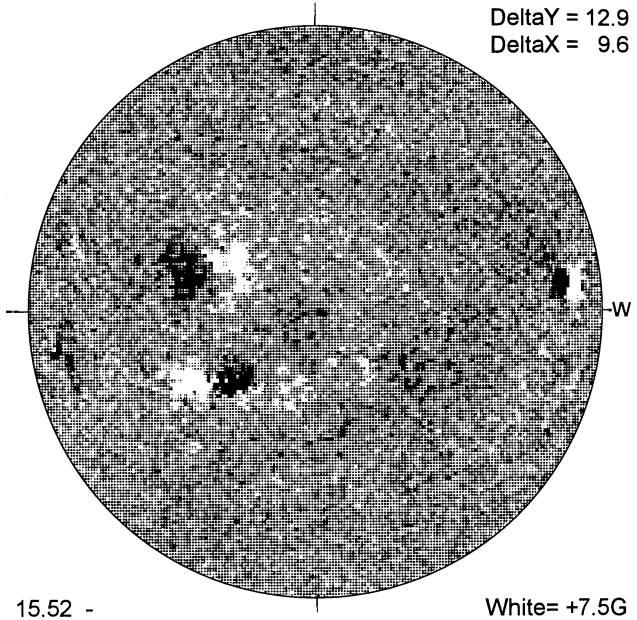

15.52 -
16.45 UT

White= +7.5G
Black = -7.5G

BIG BEAR H-ALPHA

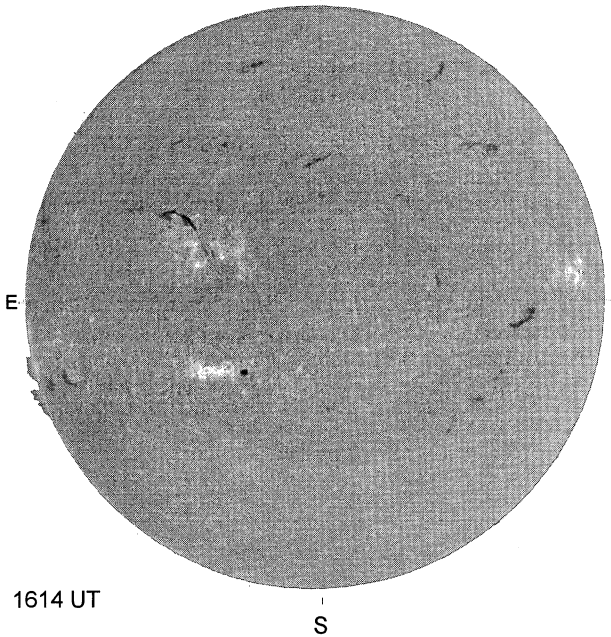

1614 UT

HOLLOMAN SUNSPOTS

HOLLOMAN SUNSPOTS
August 03, 2004
1500 UT, Good
Bp = 5.9
Po = 11.9
Lo = 198.2

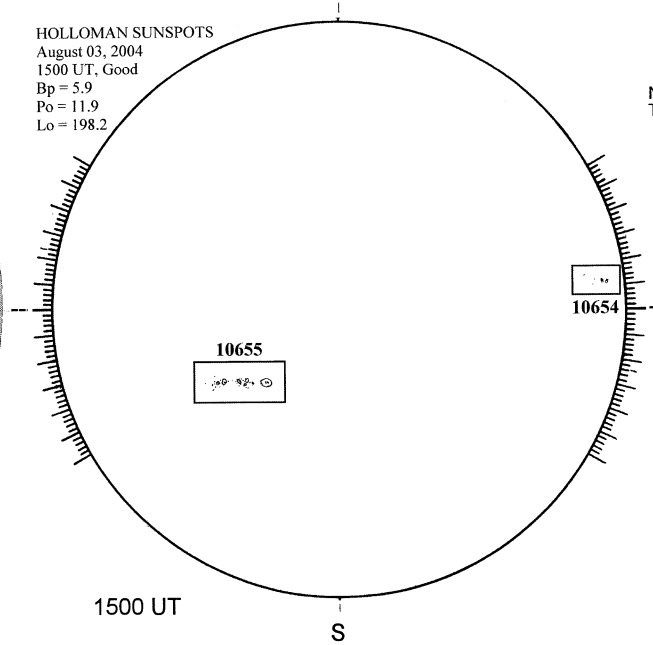

1500 UT

SACRAMENTO PEAK CORONA (1.15 Radii)----

NSO / SACRAMENTO PEAK CORONAL DATA
TICK MARKS EVERY 10 MILLIONTHS

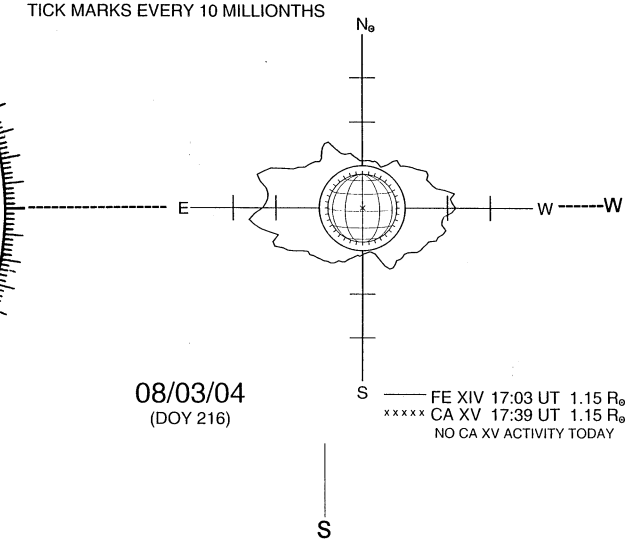

08/03/04
(DOY 216)

FE XIV 17:03 UT 1.15 $R_\odot$
xxxxx CA XV 17:39 UT 1.15 $R_\odot$
NO CA XV ACTIVITY TODAY