JULY 30, 2004 (P= 10.14, Bo = 5.66, Lo = 258.89)

KITT PEAK MAGNETOGRAM—SOLIS

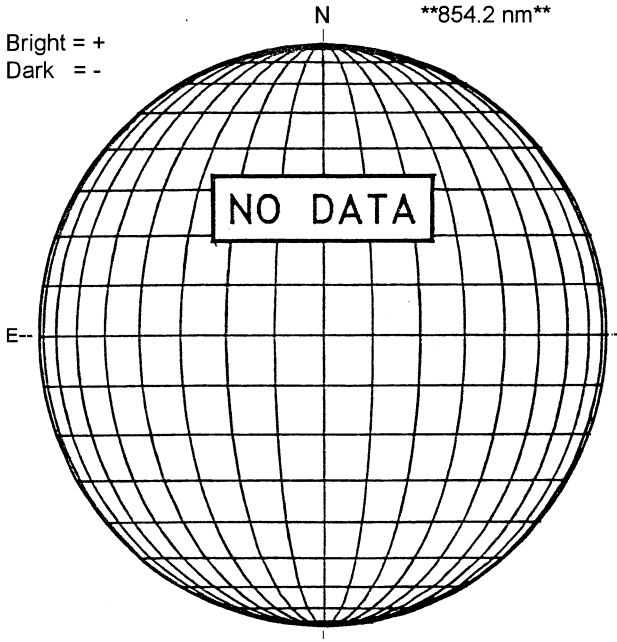

STANFORD MAGNETOGRAM

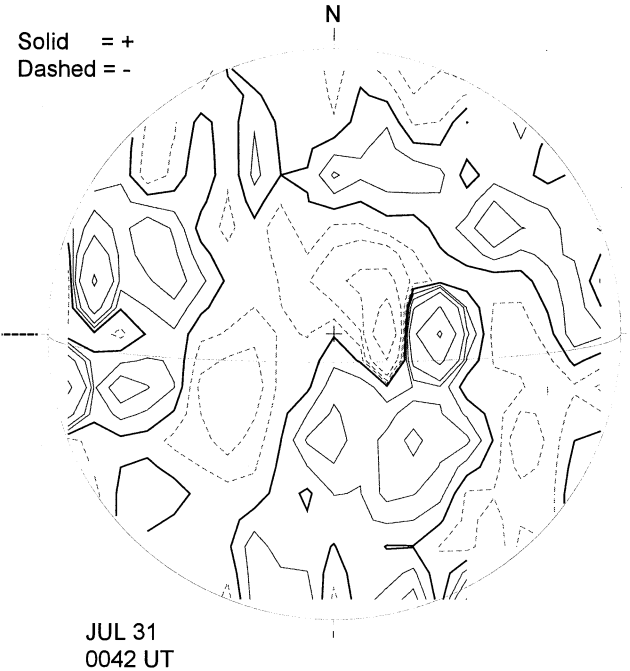

MT. WILSON MAGNETOGRAM

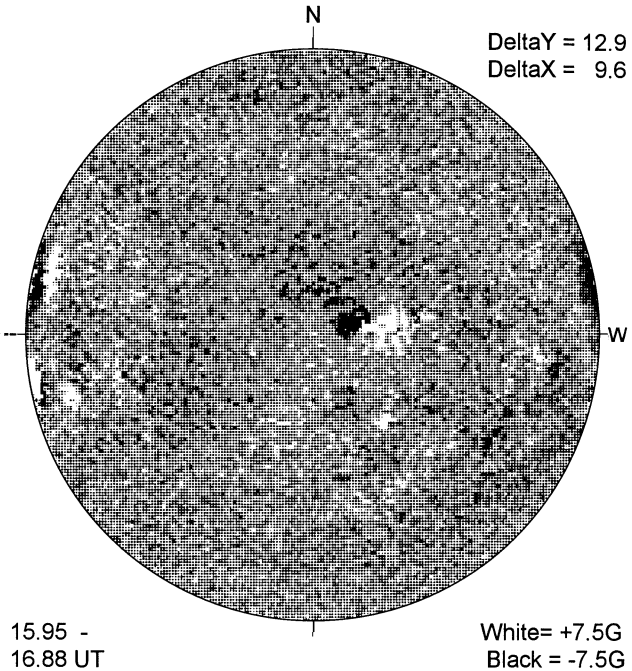

BIG BEAR H-ALPHA

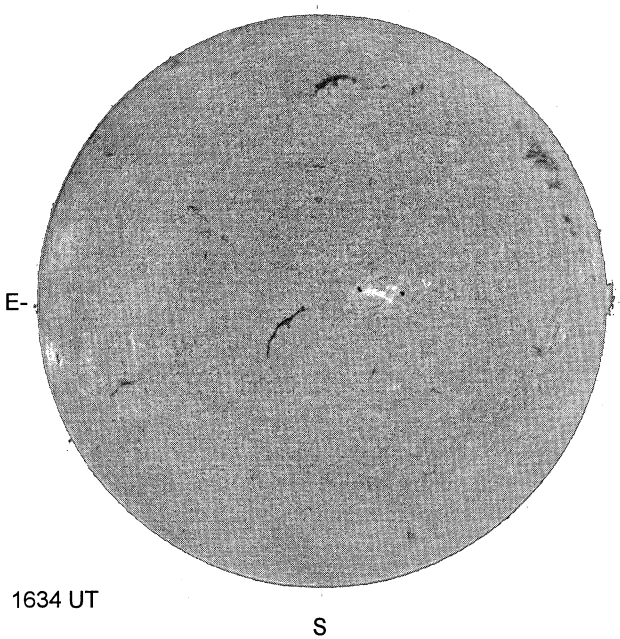

HOLLOMAN SUNSPOTS

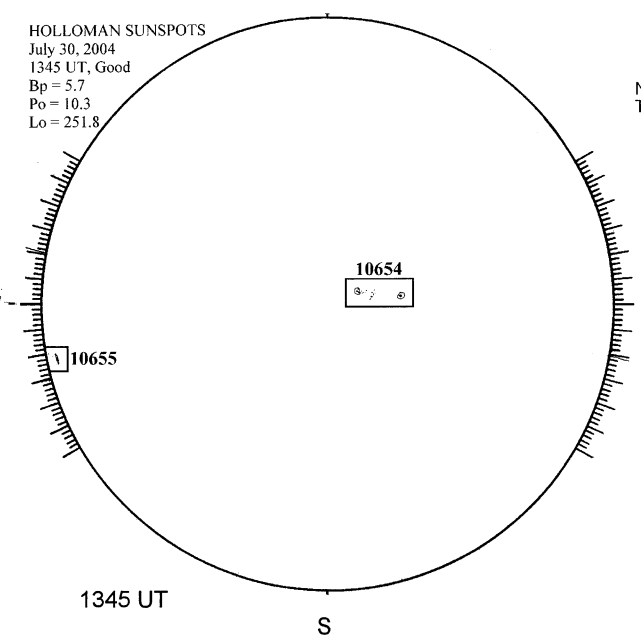
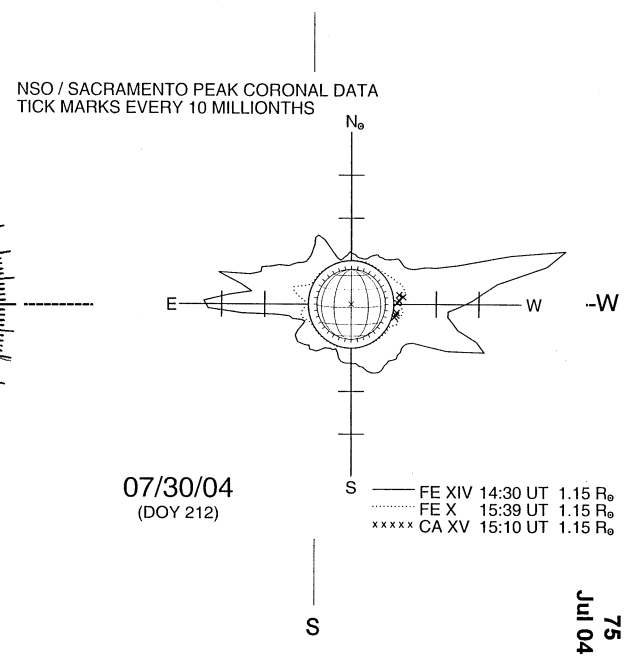
SACRAMENTO PEAK CORONA (1.15 Radii)----