JULY 21, 2004 (P= 6.38, Bo = 4.92, Lo = 17.95)

KITT PEAK MAGNETOGRAM--SOLIS

N **854.2 nm**

Bright = +
Dark = -

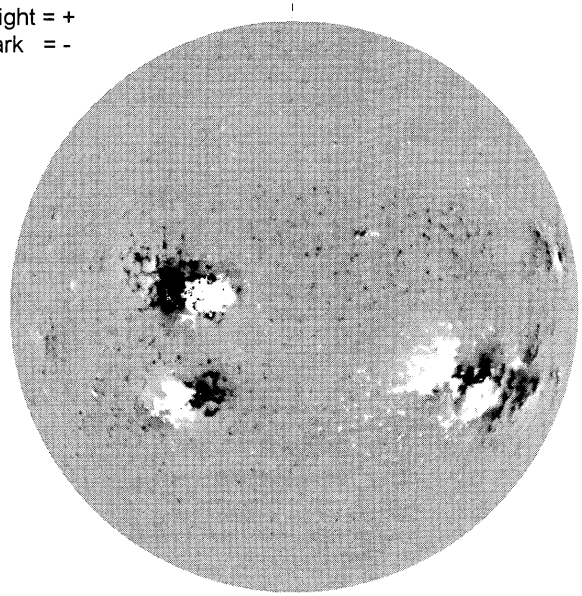

E--

1812 UT

STANFORD MAGNETOGRAM

N

Solid = +
Dashed = -

1744 UT

MT. WILSON MAGNETOGRAM

N

DeltaY = 13.0
DeltaX = 9.6

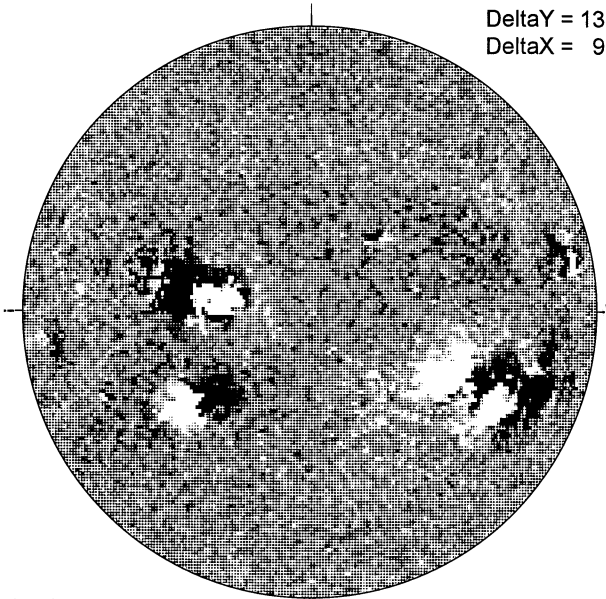

-W

16.37 -
17.30 UT

White= +7.5G
Black = -7.5G

BIG BEAR H-ALPHA

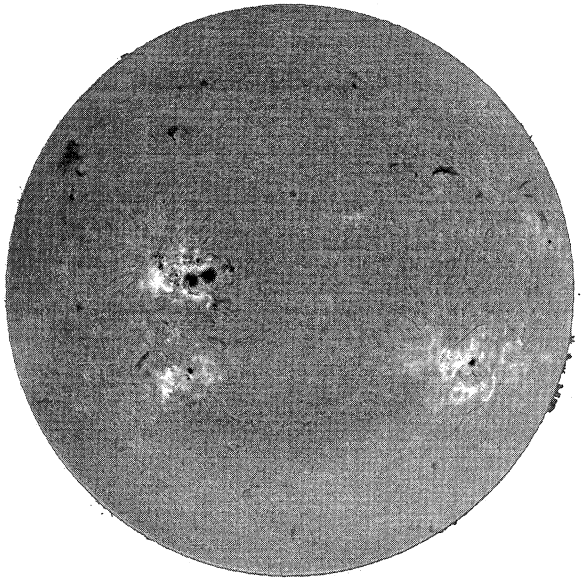

E

1554 UT

S

HOLLOMAN SUNSPOTS

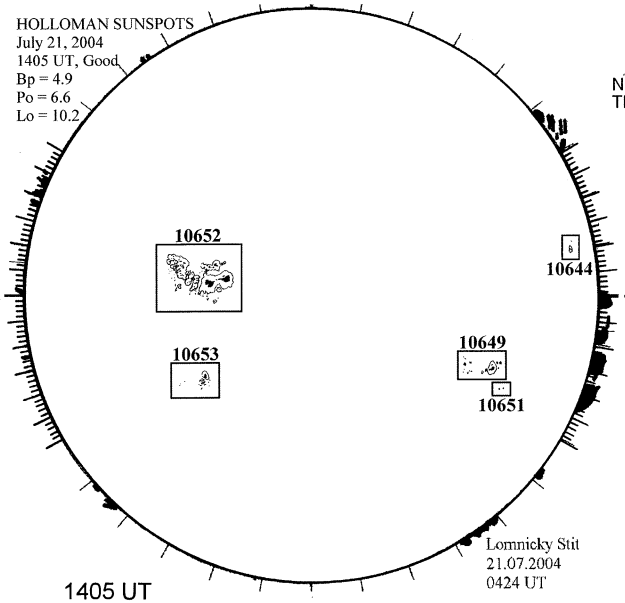

1405 UT
0424 UT LOMN Prom S

SACRAMENTO PEAK CORONA (1.15 Radii)----

NSO / SACRAMENTO PEAK CORONAL DATA
TICK MARKS EVERY 10 MILLIONTHS

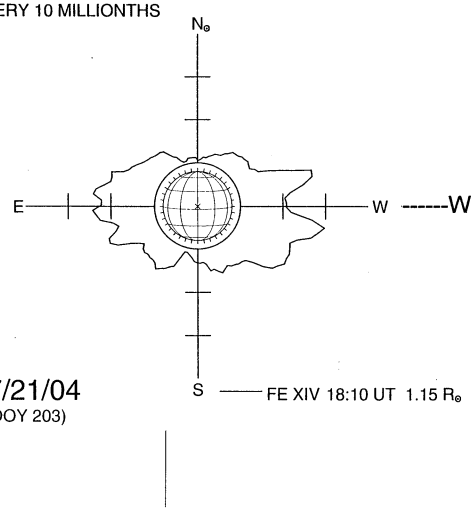

07/21/04
(DOY 203)

S