JULY 15, 2004 (P= 3.76, Bo = 4.36, Lo = 97.34)

KITT PEAK MAGNETOGRAM--SOLIS

854.2 nm

Bright = +
Dark = -

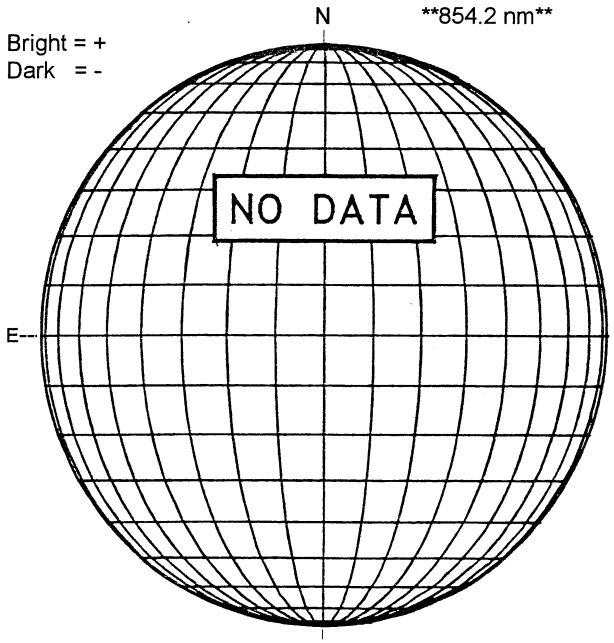

STANFORD MAGNETOGRAM

Solid = +
Dashed = -

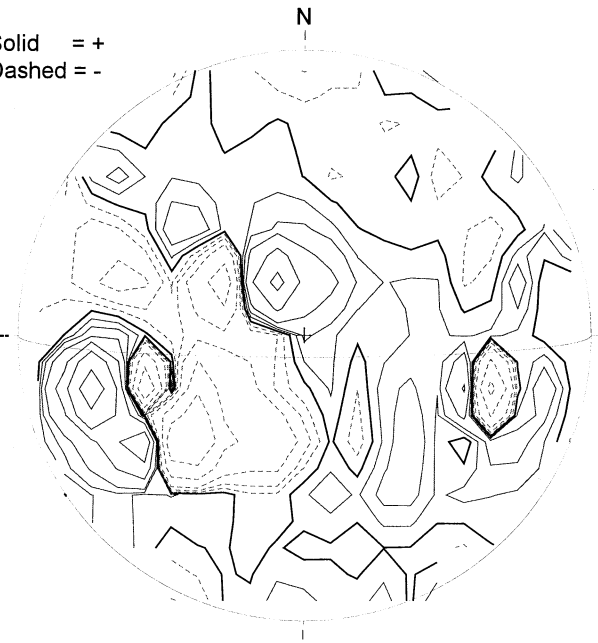

1620 UT

MT. WILSON MAGNETOGRAM

DeltaY =
DeltaX =

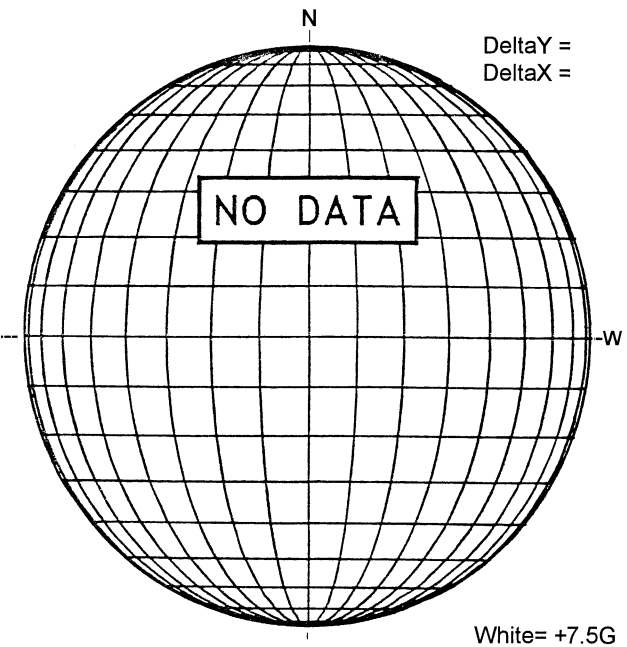

White= +7.5G
Black = -7.5G

BIG BEAR H-ALPHA

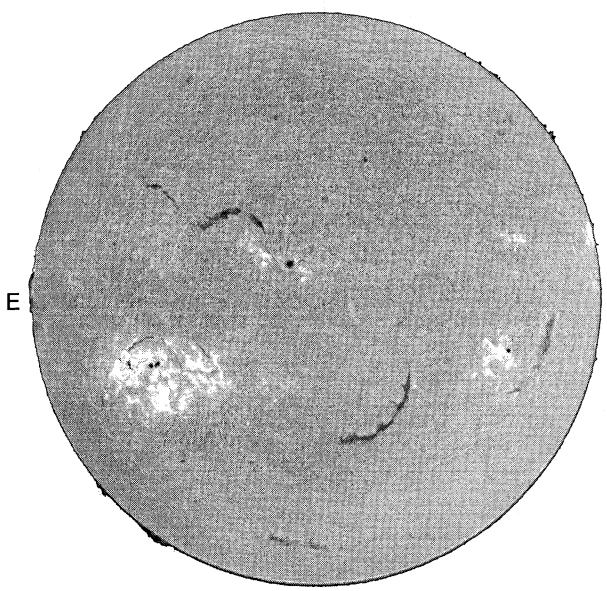

2131 UT

S

HOLLOMAN SUNSPOTS

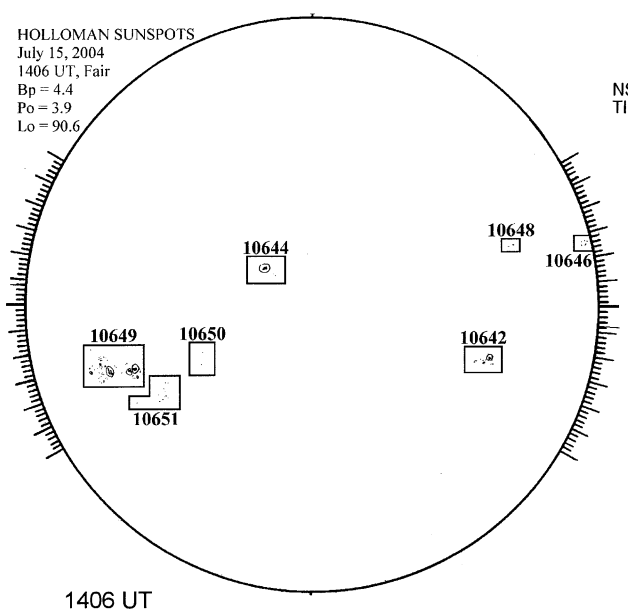

1406 UT

S

SACRAMENTO PEAK CORONA (1.15 Radii)

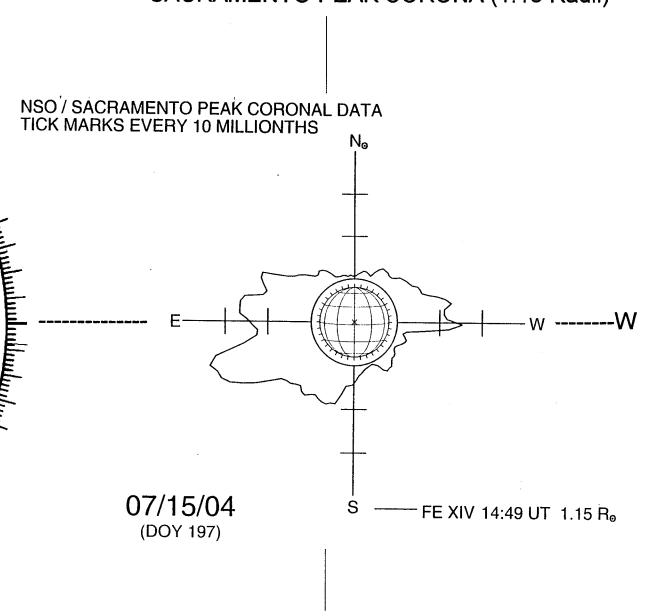

S